APK

FORCEMECH

INNOVATE MOBILITY FREEDOM

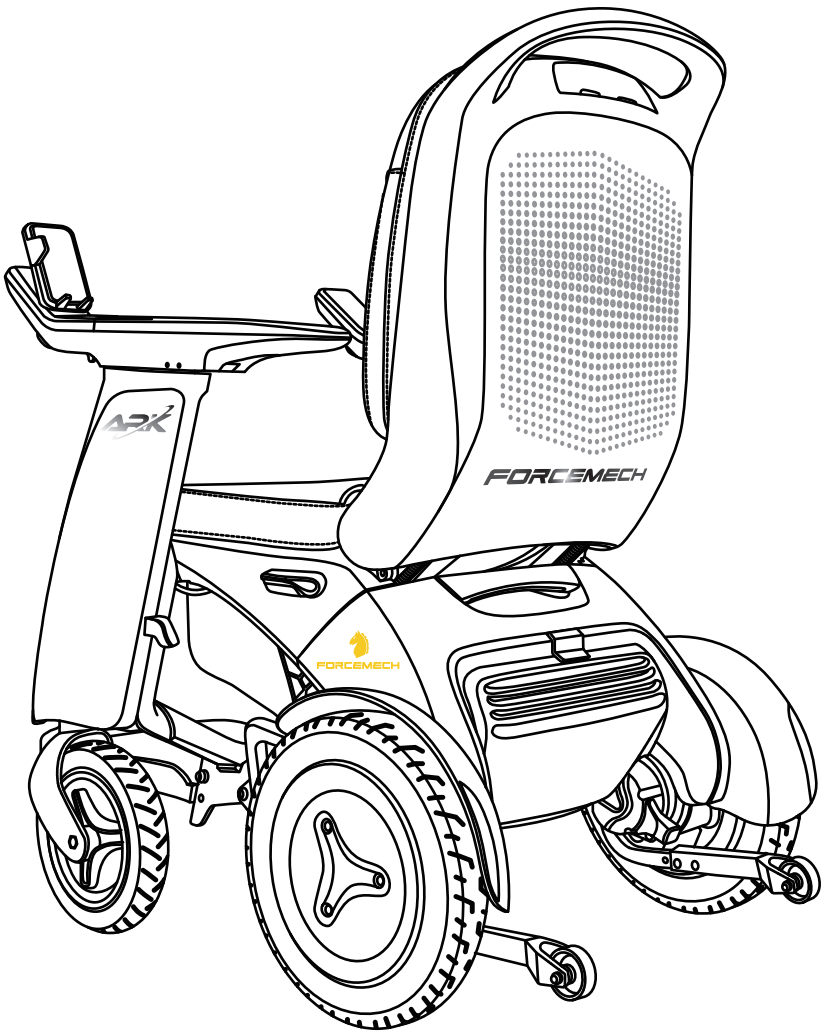

Product Manual

With Quick Start Guide

www.forcemech.com

support@forcemech.com

TABLE OF CONTENTS

I. Introduction

Overview and Safety Information	2-3

II. Quick Start Guide

2.1 First Time Setup	4
2.2 Controller Functions	5
2.3 Headrest and Chair Modes	6
2.4 Charging the Chair	7

III. Features of Your Power Chair

3.1 Parts of Your Forcemech ARK	8-10

IV. Specifications and Dimensions

4.1 Chair Specifications	14
4.2 Chair Dimensions	15

V. Main Controller Functions

5.1 Controller Overview	16-18
5.2 Multi-Button Combo Features	19

VI. Safety Guidelines

6.1 Operating Safely	22-26
6.2 Lifting and Balance	28

VII. Component Guidelines

7.1 Armrests	30
7.2 Batteries	30
7.3 Fasteners	30
7.4 Footrests	32
7.5 Controllers	32

VIII. Electromagnetic Interference

8.1 EMI Overview	33
8.2 Preventive Actions	35

IX. Battery Maintenance

9.1 Charging	36
9.2 Battery Replacement	37

X. Troubleshooting

10.1 Common Issues	38
10.2 Diagnostic Charts	38

XI. Warranty

11.1 Warranty Information	40

I INTRODUCTION

Dear New Forcmech ARK Owner:

Thank you for choosing the Forcemech ARK Powerchair—a pinnacle of innovation designed to seamlessly blend comfort, durability, and functionality. Whether navigating indoor environments or venturing outdoors, the Forcemech ARK offers an unparalleled mobility solution to meet your daily needs. With robust brushless motors, pneumatic tires, and an intuitive control system, it delivers a smooth, reliable ride with enhanced stability and effortless operation.

This manual serves as your comprehensive guide to setup, safe operation, maintenance, and troubleshooting. We encourage you to review each section thoroughly to unlock the full potential of your Forcemech ARK and ensure its longevity. Should you have any questions or require assistance, our dedicated support team is just a call or email away at 1-877-90-FORCE or support@forcemech.com.

Once again, thank you for placing your trust in Forcemech. Our commitment is to empower your journey with confidence and reliability. May your Forcemech ARK accompany you through daily activities and exciting adventures, steadfast and dependable every step of the way.

-The Entire Forcemech Team

I INTRODUCTION

Before operating this power chair for the very first time, please read and follow all instructions in this manual carefully. To avoid personal injuries and/or damage to the power chair, it is very important for you to have a comprehensive knowledge of the features of this power chair. If you have any trouble understanding the instructions of this manual or require further assistance for setting up, operating, and the maintenance of this power chair, please contact us immediately.



This manual serves as the ultimate guideline for you, your assistant, or caretaker who's helping you with operating this power chair. Read this manual carefully and review it often until you are certain how to handle every procedure of operating this power chair. Forcemech and its affiliates cannot be held responsible for personal injuries or property damage caused by improper handling of the Forcemech ARK power chair.

Your opinions are very important to us – if you have any comments on the functionality and safety of this power chair, or the contents of this manual, please feel free to call us at 1-877-90-FORCE
or email us at support@forcemech.com

STEP 1

Lift the Armrest Folding Lever to Adjust the Armrest

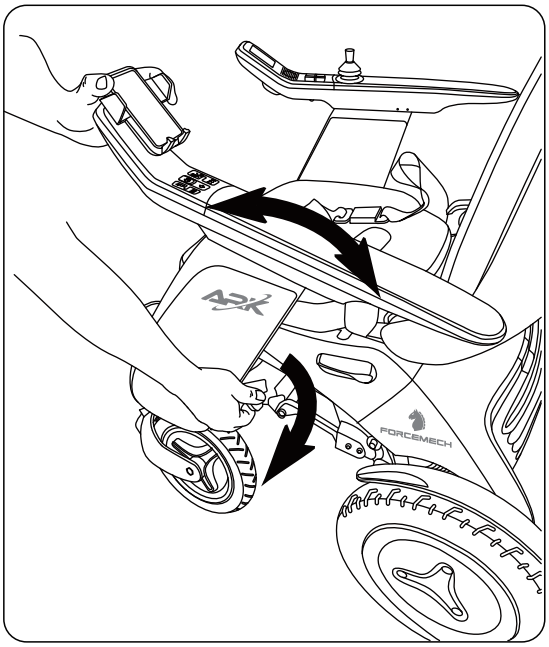

STEP 2

Lift the Backrest Recline Lever to Adjust the Backrest

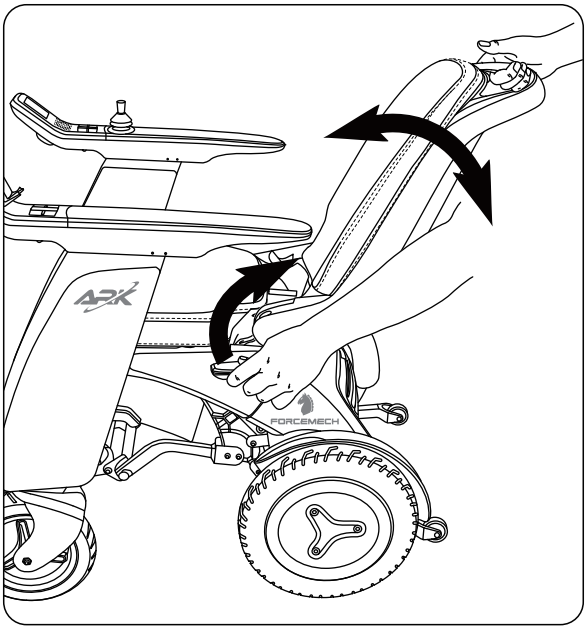

STEP 3

Main Controller Functions

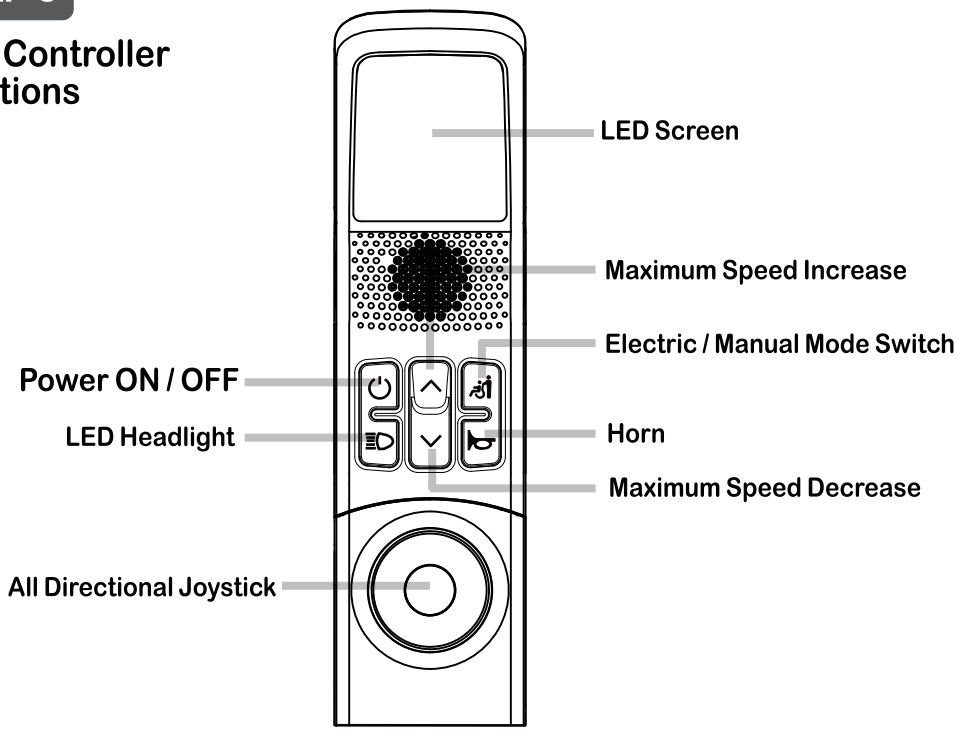

STEP 4

Speaker Controller Functions

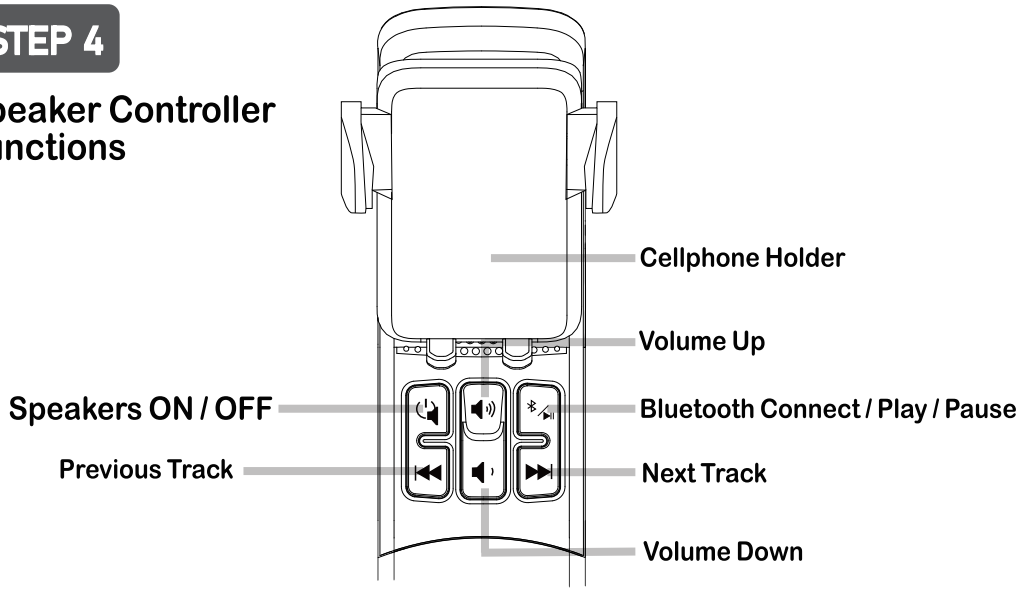

STEP 5

Your Forcemch ARK may come with an optional accessory an Headrest, it is optional to install the headrest. the chair can operate without headrest.

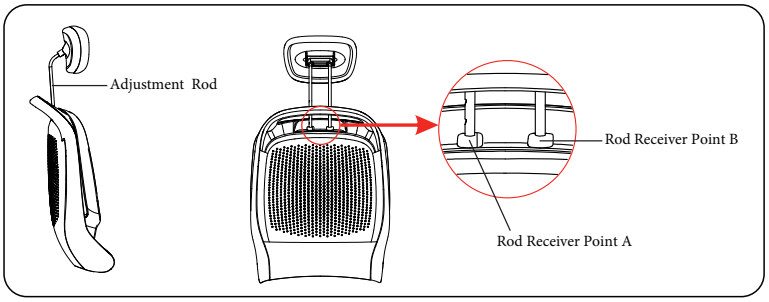

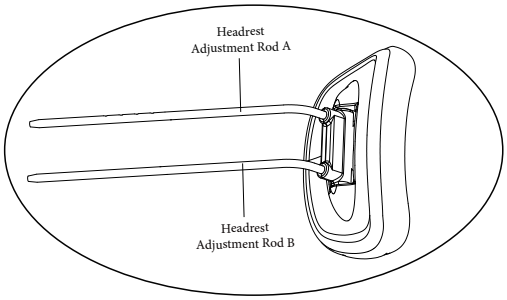

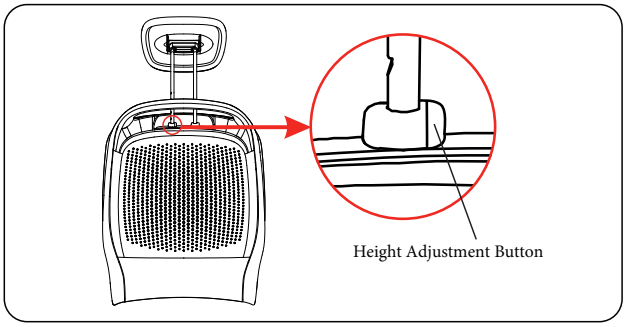

STEP 6

Switching Between Electric / Manual Push mode can be accomplished by pressing the Electric / Manual Mode Switch Main Controller or From the Rear Electric / Manual Mode Levers on the Motors.

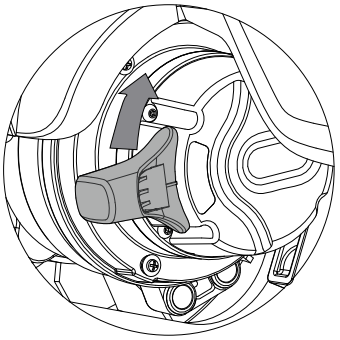



While Standing Behind the Chair

Make sure Chair is POWERED OFF before switching modes

Both Levers need to be pushed **Forward** to Engage **Manual Mode**

Both Levers need to be pushed **Backward** to Engage **Electric Mode**

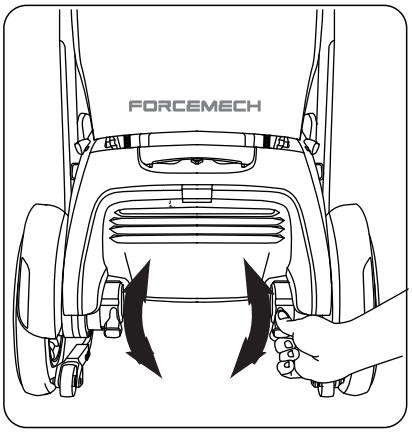

STEP 7

Charging the Powerchair

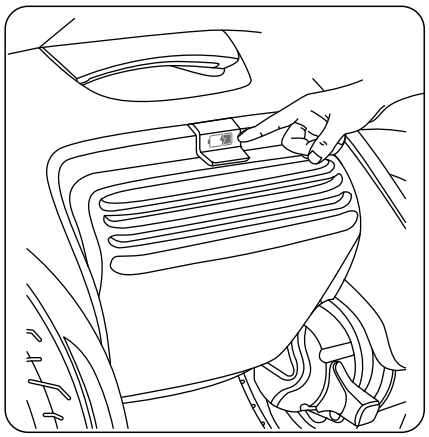

Located Charging Port at the Rear of the Chair

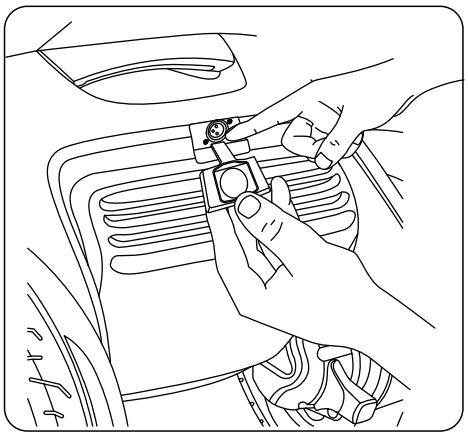

Remove Charging Port Cover

Forcemech ARK Must only be charged with the charger supplied by Forcemech, failure to use the correct charger may result in malfunction and/or severe damage to the chair and operator.

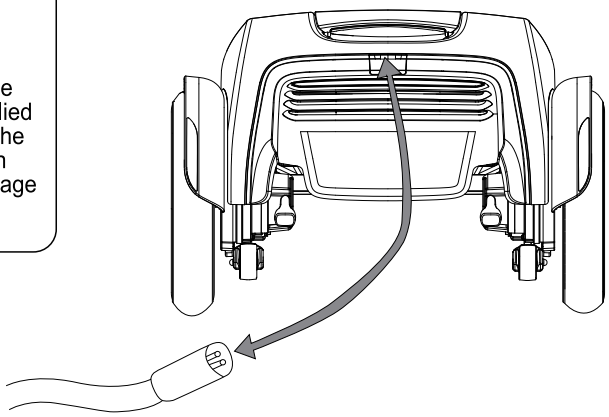

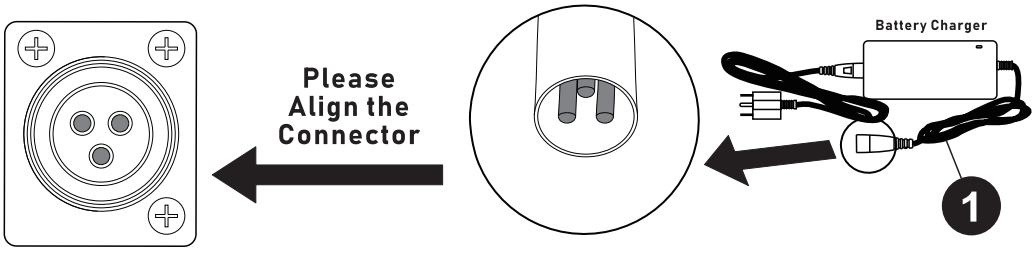

III FEATURES OF YOUR POWER CHAIR

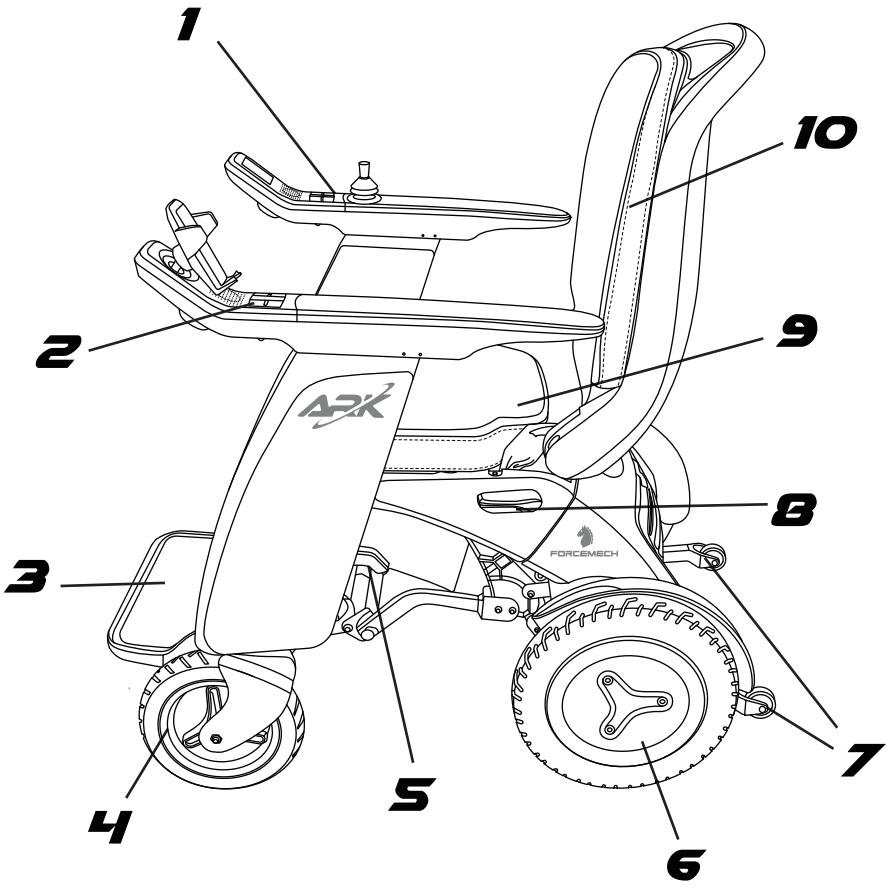

3.1 Parts of Your Forcemech ARK (View From Left)

1. Main Controller
2. Speaker Controller
3. Footrest
4. Front Wheel
5. Armrest Folding Lever
6. Rear (Drive) Wheel
7. Anti-Tipping Wheel
8. Backrest Recline Lever
9. Seat Cushion
10. Backrest Cushion

III FEATURES OF YOUR POWER CHAIR

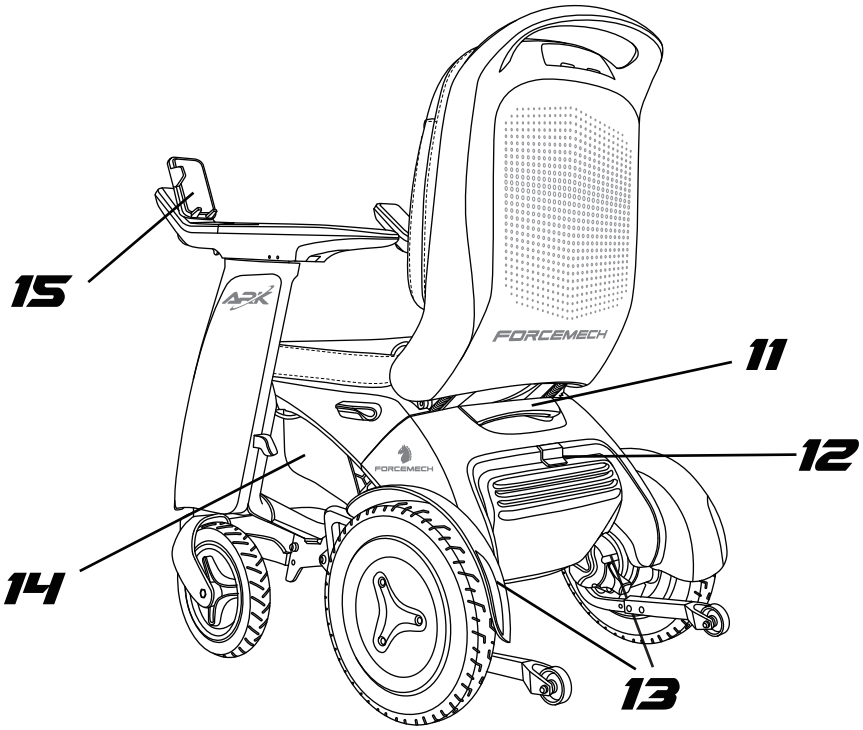

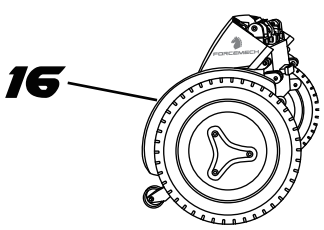

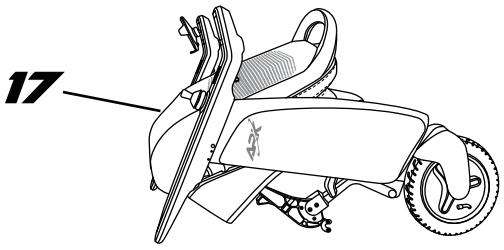

3.1 Parts of Your Forcemech ARK (View From Back)

11. Powertrain Compartment Handle

12. Charging Port

13. Electric Manual Mode Switch (When Chair is Powered OFF)

14. Underseat Carriage Bag

15. Cellphone Holder

16. Powertrain Compartment

17. Chair Compartment

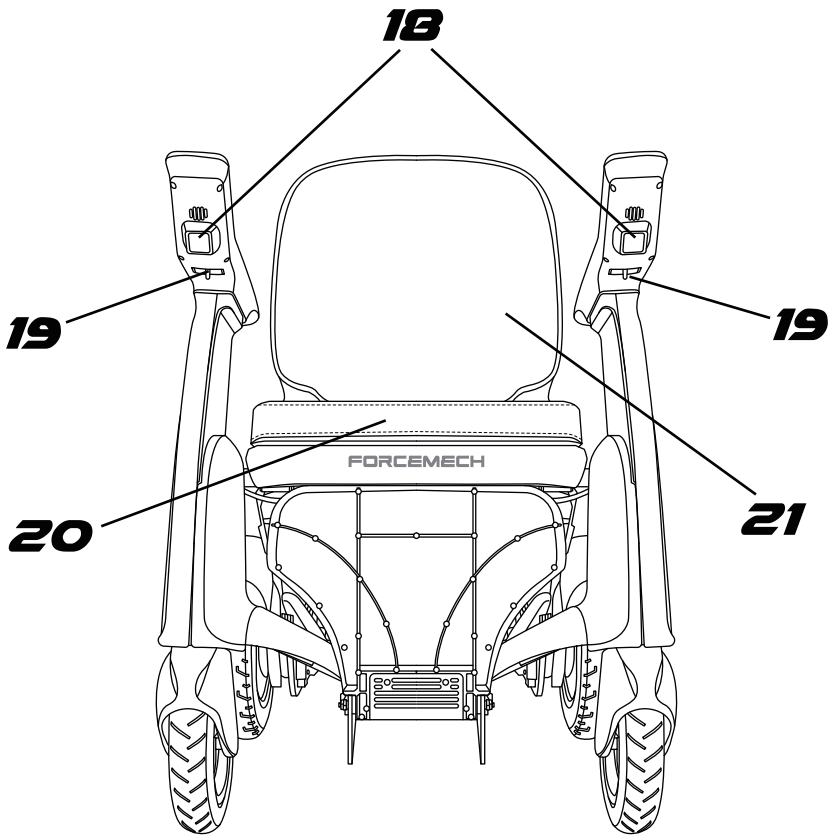

3.1 Parts of Your Forcemech ARK (View From Front)

18. LED Headlight

19. USB Charging Port

20. Seat Cushion

21. Backrest Cushion

IV TAKING APART THE POWER CHAIR

STEP 1

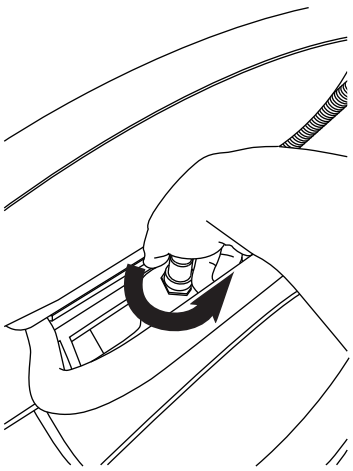

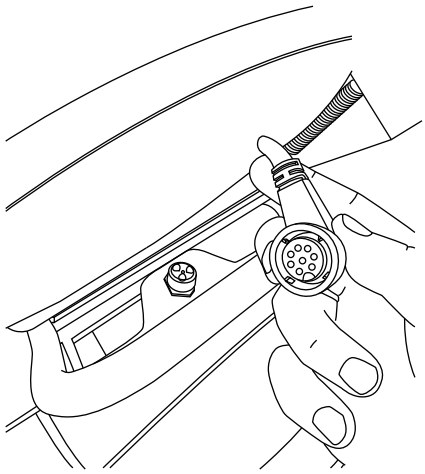

Locate and Disconnect the Power Cable Behind the Powertrain Compartment Handle, Twist Counter-Clock Wise to Loosen and Then Pull To Disconnect. Please note the Pin Must be Matched Correctly When You are Ready to Reconnect.

STEP 2

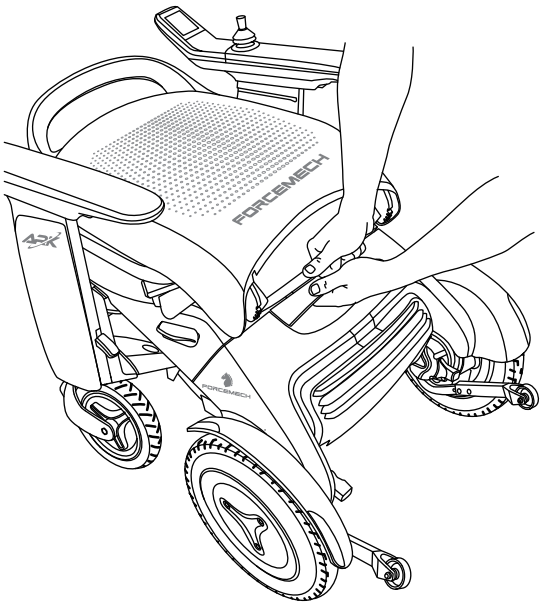

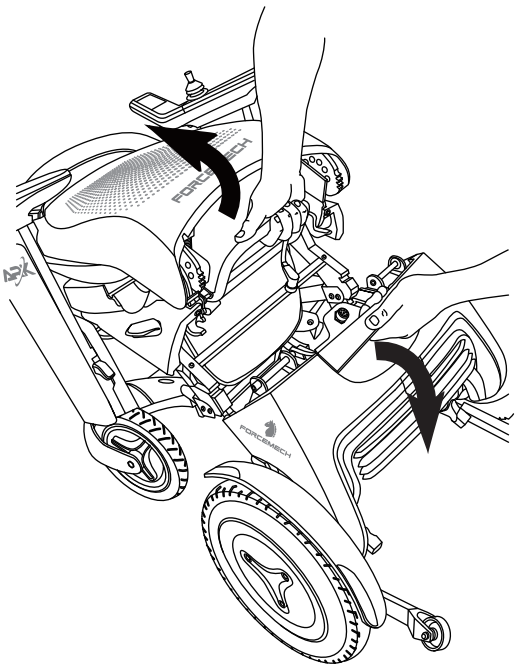

Locate the Powertrain Compartment Handle and the Chair Compartment Handles and Pull Apart From each other to Take Apart the Chair.

IV PUTTING TOGETHER THE POWER CHAIR

STEP 3

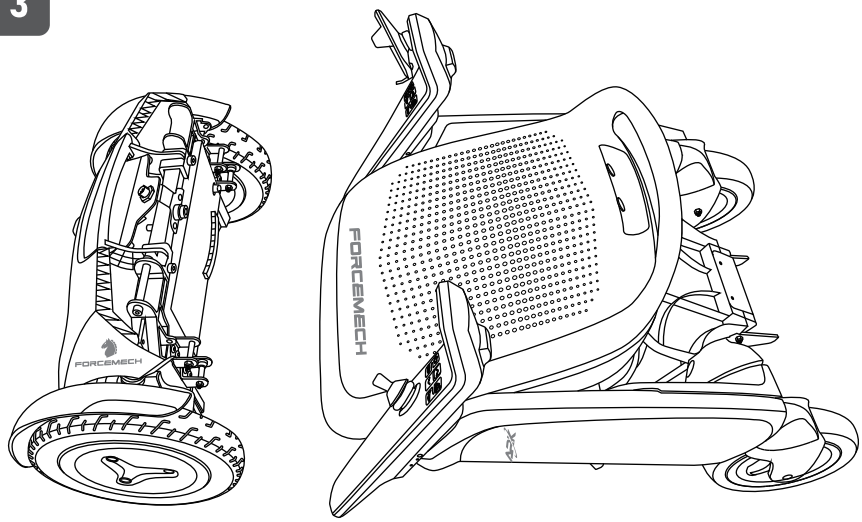

Power Chair Taken Apart, Ready For Transportation.

STEP 4

Essential Step!

When Putting the Chair Back together, Make sure the Chair Compartment Armrest is all the way Forward, as show in picture, to ensure the laches are at the correct location ready to be joined.

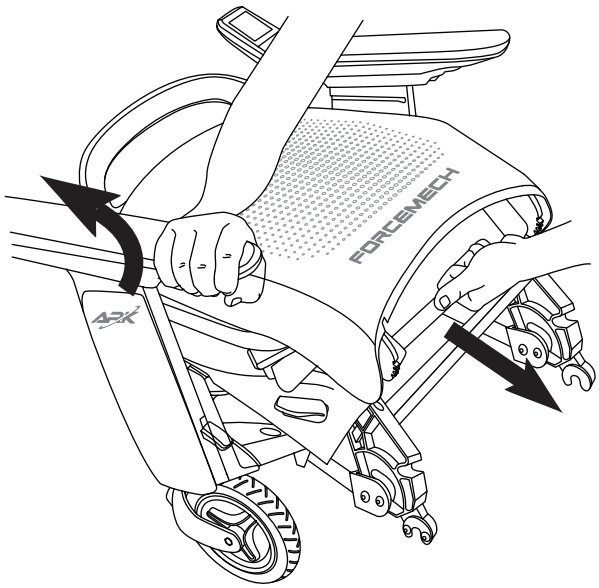

IV PUTTING TOGETHER THE POWER CHAIR

Chair Compartment Side

Powertrain Compartment Side

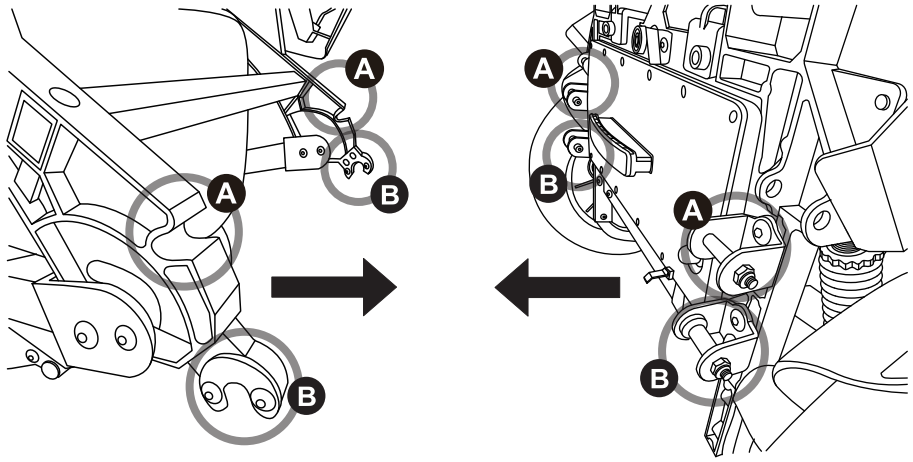

Joining the Locking Groves and Latches from Both Compartment of the Chair by matching Groves and Latches Marked (A) from the Chair Compartment Side to the Groves and Latches Marked (A) on the Powertrain Side, match the Groves and Latches Marked (B) from the Chair Compartment Side to the Groves and Latched Marked (B) from the Powertrain Side.

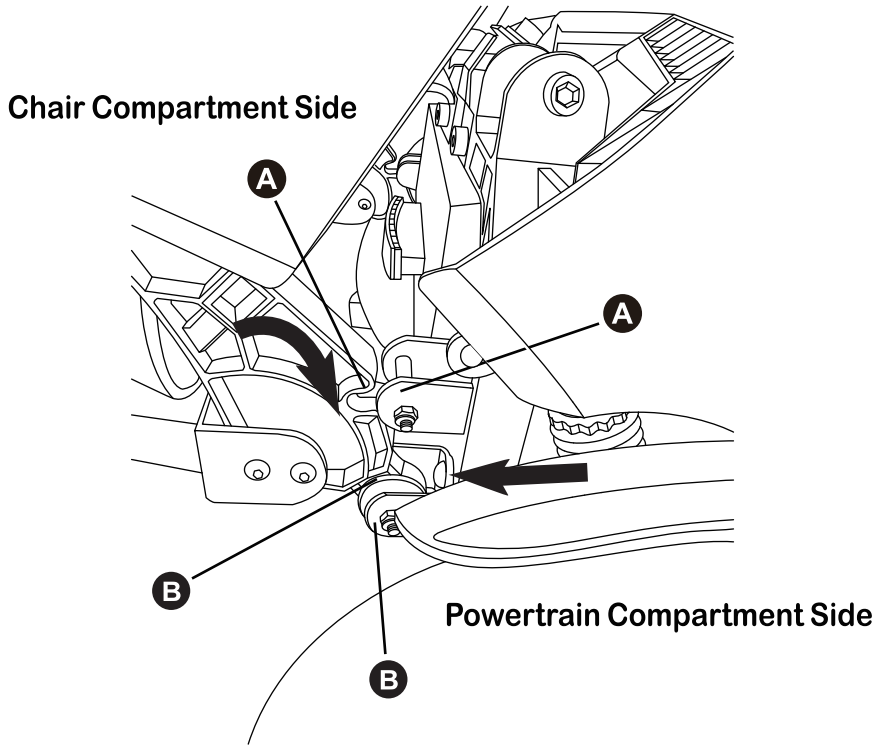

V SPECIFICATIONS

Overall Length	41"
Overall Width(L*W*H)	24.5"
Overall Height	40"
Seat Width	19"
Seat Depth	18"
Seat Height	21"
Backrest Height	59"
Width of Folding Front Frame	24"
Wheel Type	Pneumatic Tire
Front Wheel Diameter	9"
Rear Wheel Diameter	12.5"
Chair Weight	90lbs
Maximum Loading Capacity	330lbs
Operation Voltage	DC24V
Battery Type	Lithium Ion 24V 16Ah
Motor Type	Brushless 300Watt
Controller	All Directional Joystick with LED screen
Break System	Automatic Electromagnetic
Charger Type	AC 110-220V/50Hz
Overload Protection	YES
Maximum Speed	4MPH
Slope Capacity	≤9°
Climbing Capacity	≤10°
Obstacle Clerance Height	1.5"
Cross Groove Width	4"
Turning Radius	39"
Maximum Travel Range	15 Miles
Overall Length	41"
Overall Width(L*W*H)	24.5"
Overall Height	40"
Seat Width	19"
Seat Depth	18"

Forcemech ARK
Chair Dimensions

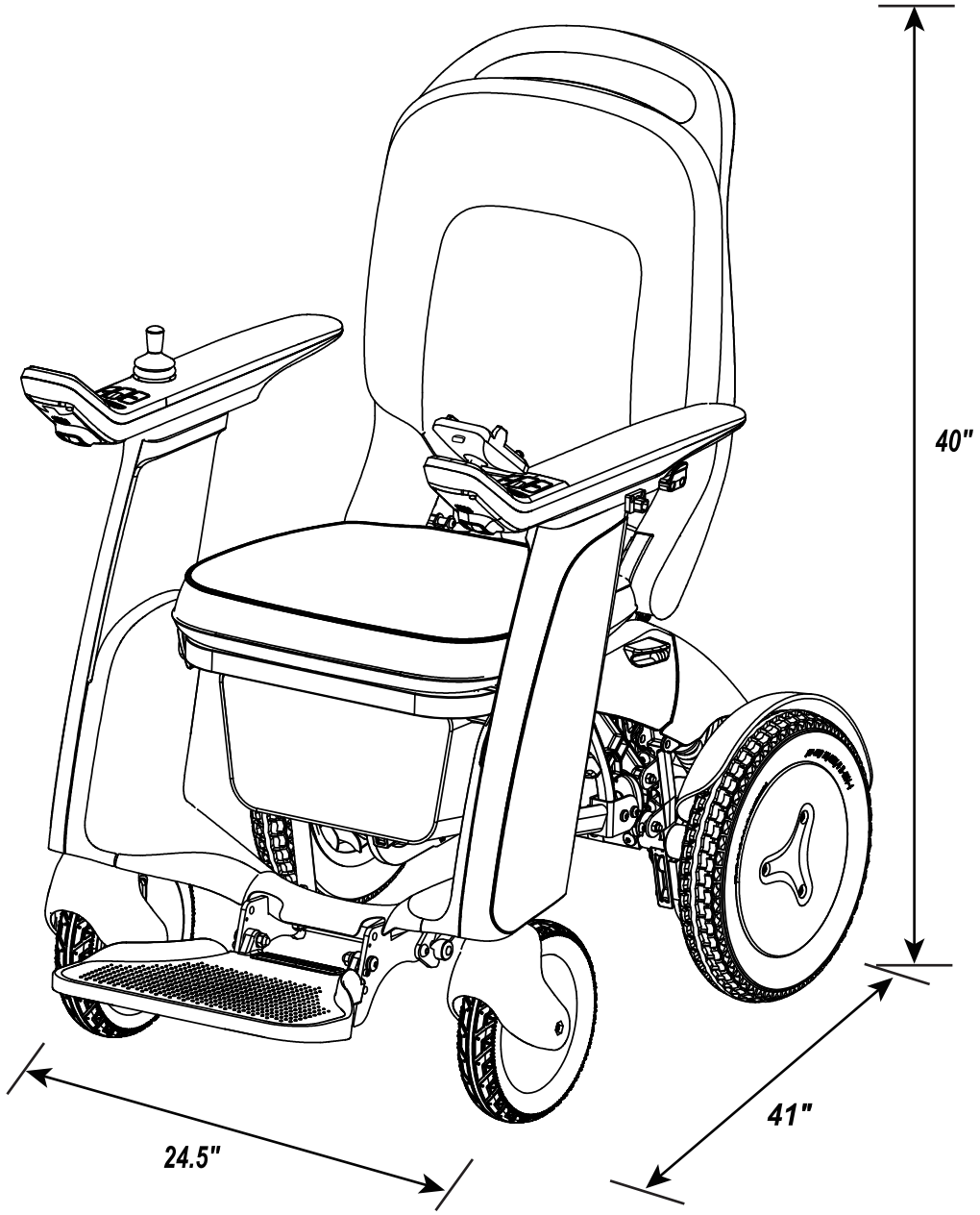

V ELECTRICAL DIAGRAM

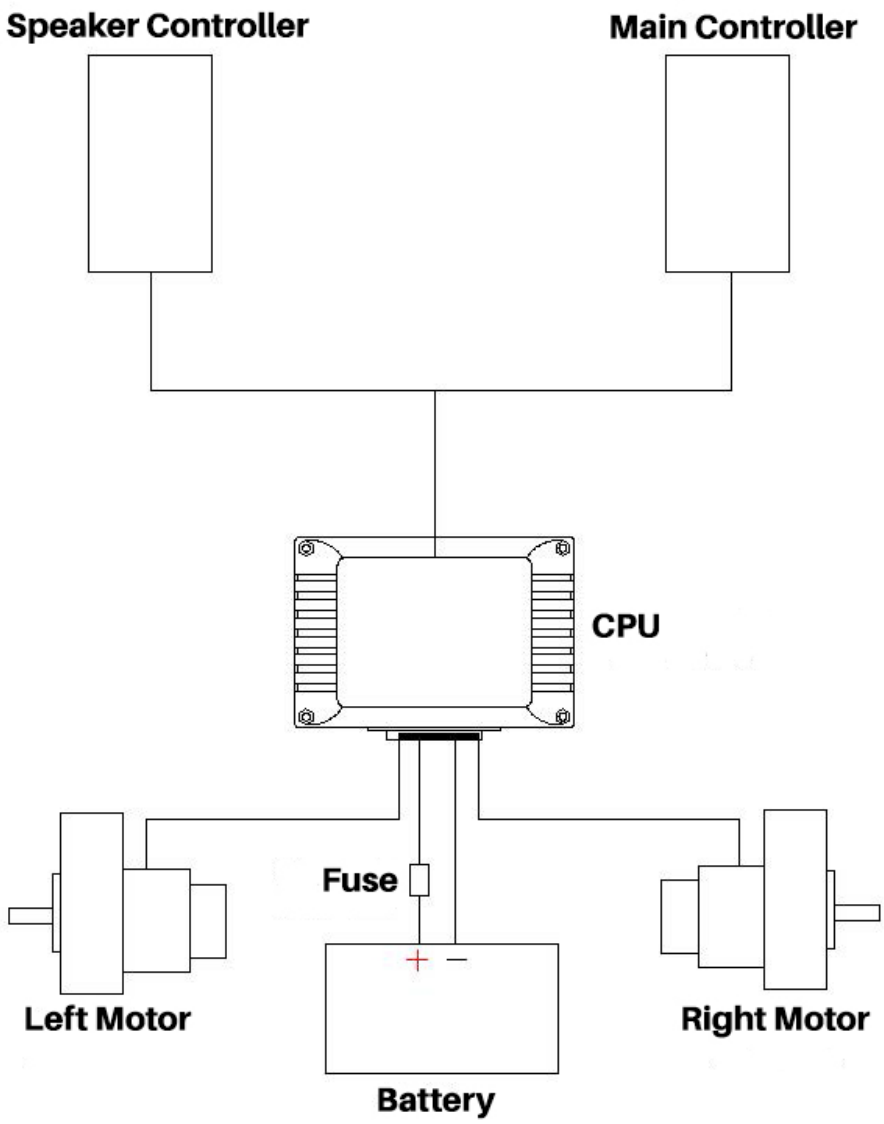

VI MAIN CONTROLLER FUNCTIONS

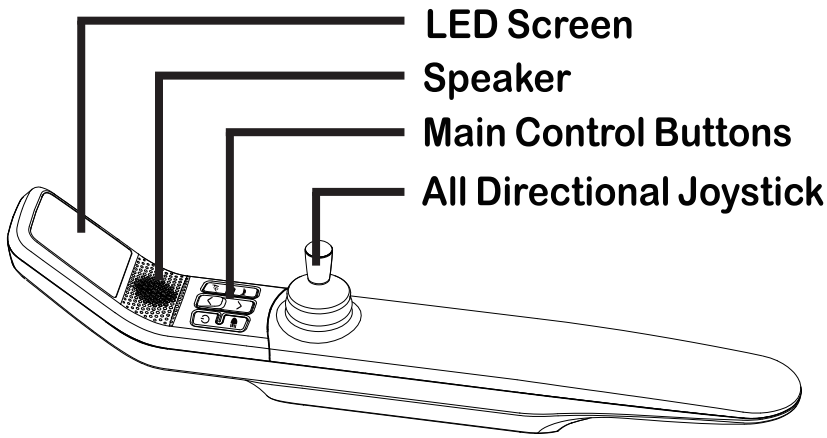

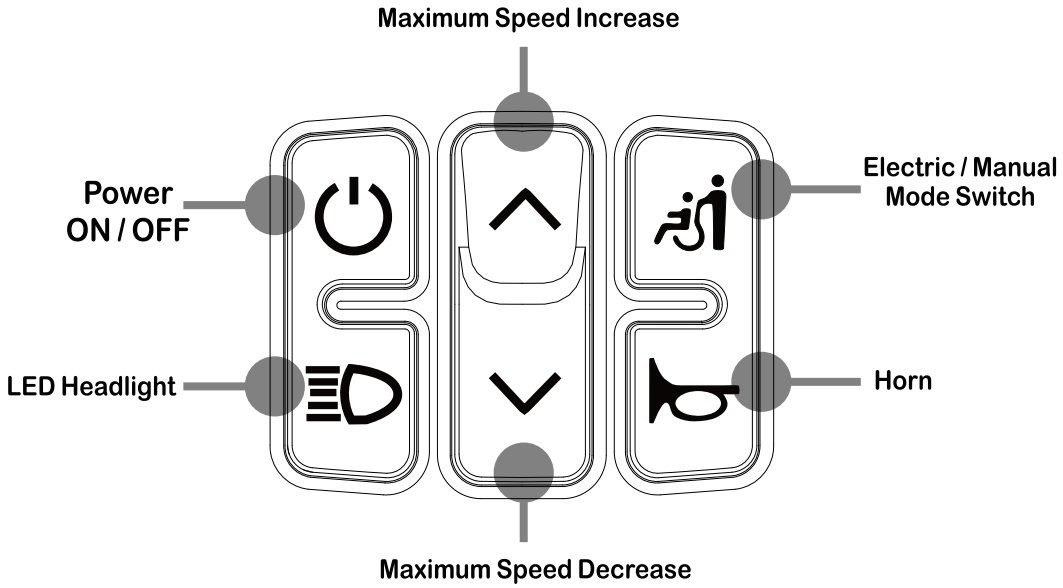

Power ON / OFF	Press to Turn the Power Chair ON, Press Again to Turn the Power Chair OFF
LED Headlight	Press to Turn the LED Head Lights ON, Press Again to Turn them OFF
Maximum Speed Increase	Press to Incease the Maximum Speed of the Power Chair
Maximum Speed Decrease	Press to Decease the Maximum Speed of the Power Chair
Electric / Manual Switch (When chair is ON)	Press and Hold for 2 Seconds to Engage Manual Push Mode, Press and Hold for 2 Seconds Again to Disengage Manual Push Mode.
Horn	Press to Sound the Horn

VI MAIN CONTROLLER FUNCTIONS

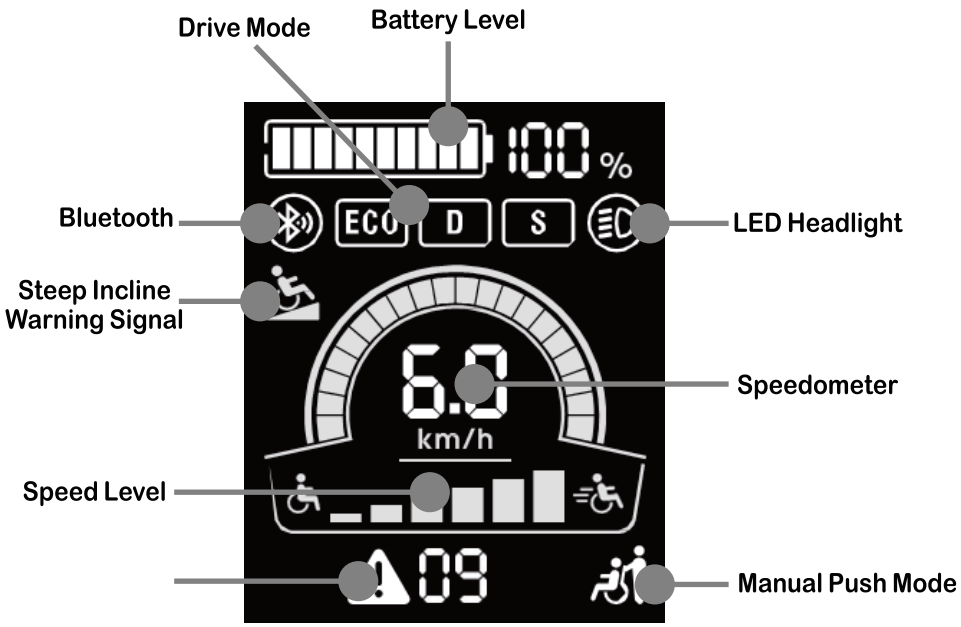

Battery Level	Indicator for Current Battery Level.
Drive Mode	Indicator for Current Drive Mode, See Section 3.2 on Details on Drive Modes.
Bluetooth	Indicator for Bluetooth Connection, See Section 3.2 on Details on Bluetooth.
LED Headlight	Indicator for when the LED Headlight is ON
Steep Incline Warning Signal	Indicator for When the Chair is Riding on Uneven Terrain and Climbing Angle >10°
Speedometer	Displays the Current Speed in KM/H
Speed Level	Indicator of the Current Maximum Speed Level.
Manual Push Mode	Indicator for when the Manual Push Mode is Engaged.
Error Code	Please see section 5.1 for Error Code Chart and Fixes.

VI MAIN CONTROLLER FUNCTIONS

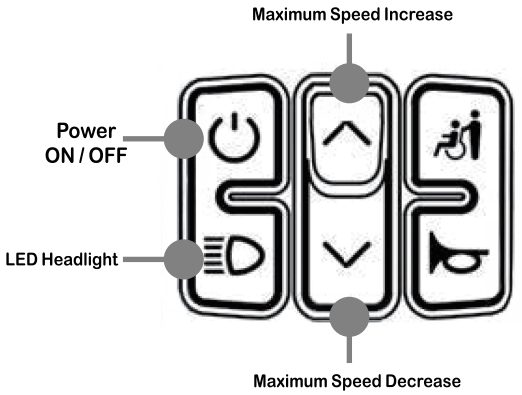

This section coverd Main Controller's Multi Button Combo Functions, These functions require pushing multiple buttons together to achieve the additional features of the Power Chair.

The Power Chair has 3 Drive Modes



To Switch Between Modes, Please Follow the Following Steps:

1. **While The Chair is Powered OFF, Press and Hold the LED Headlight Button.**
2. **Press the Power ON/OFF Button Once to Power ON the Chair, While Continuing to Hold the LED Headlight Button.**
3. **Press the Maximum Speed Increase or Maximum Speed Decrease Button To Switch Between the 3 Modes.**

Mode	Motor Accleration Speed	Battery Power Consumption
ECO	Slow	Low
D	Moderate	Moderate
S	Fast	High

The Power Chair Main Controller has 3 Voice Announcement Profiles

The Voice Over Announces When You Press on Function Buttons, You May Choose Between Male/Female/No Announcement to Your Preference, to Switch Between the Modes, Please Follow these Steps:

1. **While The Chair is Powered OFF, Press and Hold the LED Headlight Button and The Horn Button.**
2. **Press the Power ON/OFF Button Once to Power ON the Chair, This Will Cycle the Chair to the Next Voice Announcement Profile.**
3. **The Voice Profiles Avaliable are: Male / Female / No Announcement**

VI SPEAKER CONTROLLER FUNCTIONS

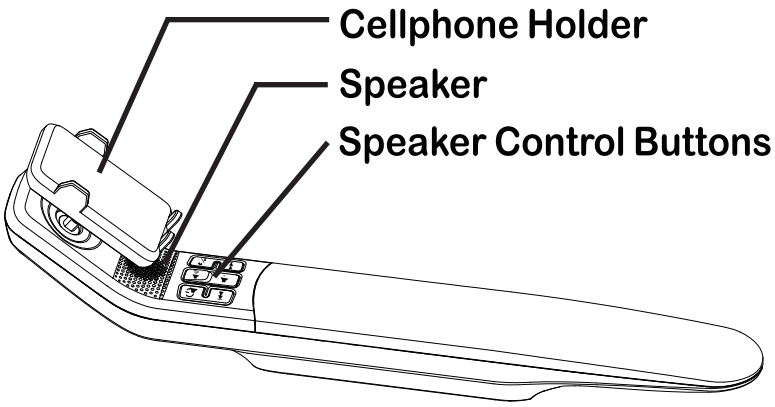

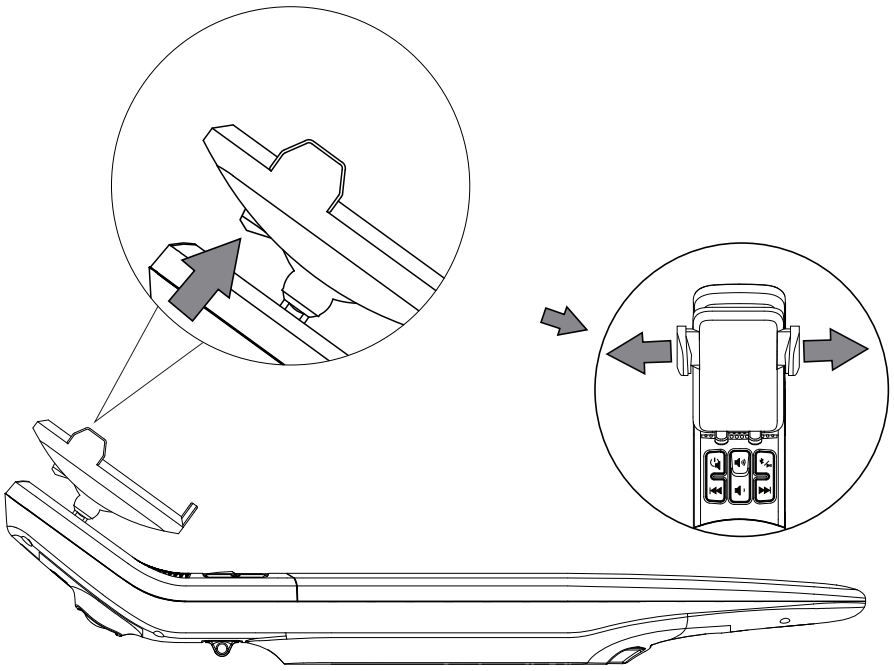

Locate the Holding Bracket Release Button at the Rear of the Cellphone Holder, Press and Release the Holding Bracket, Place Your Cellphone onto the Cellphone Holder and Squeeze the Bracket Together to Secure Your Cellphone onto the Cellphone Holder.

VI SPEAKER CONTROLLER FUNCTIONS

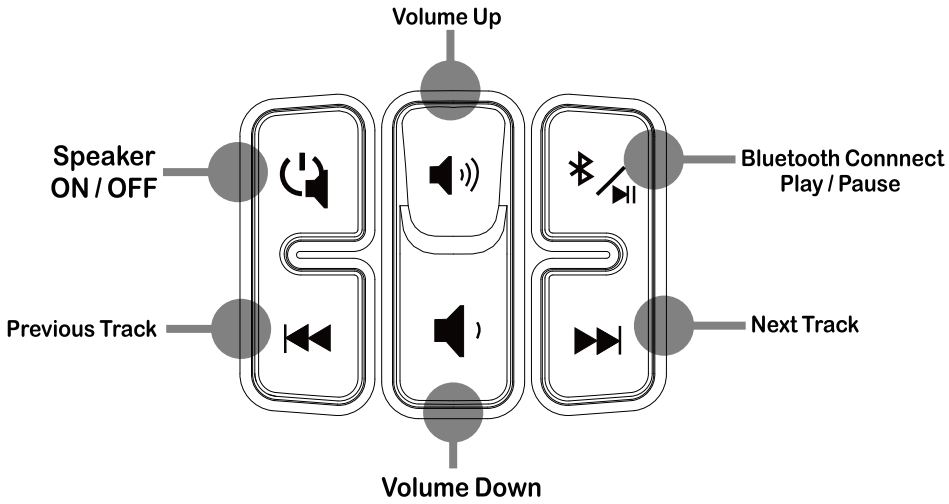

Speaker ON / OFF	Press to Turn the Speakers ON, Press Again to Turn the Speakers OFF
Bluetooth Connect + Play/Pause	Press and Hold to enter blue tooth connect mode, Press quickly to Play / Pause
Volume Up	Press to Incease the Maximum Sound Volume
Volume Down	Press to Decrease the Maximum Sound Volume
Previous Track	Press to Play the Previous Track
Next Track	Press to Play the Next Track

How to Connect to Bluetooth

1. **Press the Speaker ON/OFF Button to Turn ON.**
2. **Press and Hold the Bluetooth Connect + Play Pause Button**
3. **Find "Forcemech ARK" in your bluetooth devices and select connect, a Blue LED light will start Blinking.**
4. **When the bluetooth is successfully connected, the BLUE LED light will remain solid blue.**
5. **When the bluetooth is disconnected, the BLUE LED light will be off.**

The Power Chair Speaker Controller has 3 Voice Announcement Profiles

The Voice Over Announces When You Press on Function Buttons, You May Choose Between Male/Female/No Announcement to Your Preference, to Switch Between the Modes, Please Follow these Steps:

1. **Press to Turn ON.**
2. **Press and Hold the Button Untill Starts to Flashing and 2 Beep Sound is Heard.**
3. **Press the following buttons in sequence: (Volum Button Up>Down>Up>Down).**
4. **A Confirmation Sound will play after the above button sequence. You are now ready to change voice profile.**
5. **Press to choose from (Female/Male/No Voice Over) Profiles.**
6. **When you have selected the desired voice profile, Press , then Press to Power OFF.**
7. **Congradulations! Now you have completed changing voice profiles on the Speaker Controller.**

VII GENERAL SAFETY GUIDELINES

7.1 Important Notice

To User:

WARNING

Before operating your power chair for the first time, read over all the instructions on this manual carefully.
Before operating your power chair for the first time, take the time to become accustomed with the power chair until everything feels comfortable.
If you are operating the power chair with the help of an assistant, make sure the individual has also been thoroughly trained.
It takes time to get used to operating this power chair, have someone help you to perform actions such as leaning, stretching, reaching and dressing until you feel comfortable doing them on your own.
Do not attempt new maneuvers unless you know it is safe to do so.
Be aware of your surroundings and stay out of hazardous places.
While driving with maximum speed, do not attempt to make sharp turns.
Always wear your seat belt when operating the wheelchair.

To Attendant:

WARNING

Before assisting the power chair user for the first time, read over all the instructions on this manual carefully.
The power chair user's safety depends on you, help the user to develop safe habits of operating this power chair.
Do not attempt to sit or stand on this power chair while assisting its user.
Before pushing, make sure you switch the power chair to its manual/free wheel mode by turning off the electromagnetic brakes with the brake release lever.
Push the power chair by only using the push handle in the back of the power chair.
While pushing the power chair, do not attempt to make sharp turns.

7.2 Weight Limit

WARNING

The maximum load capacity of your Forcemech ARK is 330lbs, the user plus all items carried should not exceed this load capacity.

Do not allow additional user to sit or stand on the power chair.

When you are weight lifting while sitting on the power chair, make sure the total weight of yourself and the weights does not exceed 330lbs.

Exceeding the weight limit will most likely damage the structure of the power chair and possibly cause injuries to its user.

Damage to the power chair caused by exceeding the weight limit voids the warranty.

7.3 Sitting in the Power Chair while it's Stationary

WARNING

Make sure you turn off the power of your power chair when it is parked, even for a short period of time to prevent power chair movement due to release of brake from EMI sources and/or accidental contact with the joystick.

7.4 Operating Environment

Motors, batteries and other power chair parts are not waterproof designed, contact with water or excessive moisture can corrode these parts as well as cause an electrical circuit failure. In order to avoid damaging the power chair, you should avoid the following operations:

WARNING

Avoid operating the power chair during heavy rain fall.

Avoid operating the power chair in snow or icy conditions.

Do not operate the power chair in the bath, sauna and swimming pool.

Avoid operating the power chair when you are nearing a water source (including rivers, lakes and oceans).

Make sure the battery cover is closed at all times.

Make sure all the electrical connections are safely secured.

Dry the power chair immediately if it gets hit by water.

Make sure the batteries are kept dry at all times.

7.5 Operating Terrain

WARNING

Your power chair is suitable for driving on concrete, asphalt and indoor floor surfaces.
Avoid driving in sandy, dirt-covered or rugged terrain, operating in such terrain can cause damage to the wheels, bearings, shaft or motors, as well as loose fasteners may occur.

WARNING

Never attempt to drive onto any slope or ramp greater than 9 degrees rise or drop.
Never attempt to operate on a slope or ramp if there is snow, ice, water or oil on it.
Never attempt to drive over any bump, rocks or any protruding objects as this will result in tipping over of the chair and cause harm to the operator and damage to the chair.
If you notice your power chair is losing traction, stop operating the power chair immediately. Turn off the chair and call caretaker for assistance.
Operate only if you are sure it is safe to do so, if you are stuck in a wet environment, seek help immediately.

7.6 Operating on the Road

WARNING

In most states, operating power chair on public roads is illegal, please consult your local department of transportation for instructions to operate your power chair in the public.

WARNING

Never attempt to operate your power chair on any roadways that prohibits the use of motor vehicles.
If you are operating in the public, be aware to the danger of motor vehicles on the roads and in parking lots.
If you are operating at night, it is recommended that you wear reflective clothing.

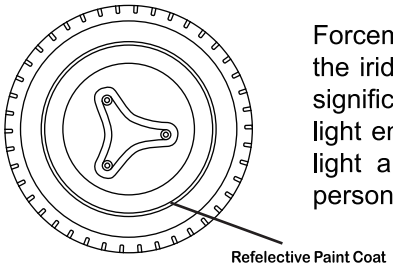

Forcemech ARK's White color is highly reflective, together with the iridescent reflective white paint coat on the wheels, which significantly increases the visibility of the power chair in the low light environment. However, caution must still be taken at low light and low visibility situations by the operator to ensure personal travel safety.

WARNING

Motor vehicle drivers may not notice you. While operating your power chair in the public, always make eye contacts with driver of the incoming vehicle before you go. If there's any doubt, yield until it is safe to operate.

7.7 Motor Vehicle Safety

As of today, the U.S. Department of Transportation has not approved any tie down system of transporting a power chair on a motor vehicle.

WARNING

Never sit on your power chair when you are on a moving motor vehicle. Any accident or immediate stop may throw you off the power chair.

Make sure you fasten your seat belt while sitting on a moving motor vehicle.

Always secure your power chair so it does not shift or roll on the motor vehicle.

Never transport this power chair in the front seat of a motor vehicle, it may shift and interfere with the driver.

7.8 Operating Through Obstacles

You will have to overcome some obstacles during your daily use of your power chair, these include but are not limited to ramps, door thresholds, lifts, potholes and broken pavements.

WARNING

If you attempt to operate your power chair through obstacles, a change of height may stop the wheels, therefore causing a fall, tip-over or loss of control, potentially injure its user and damage the power chair.

While operating your power chair, beware of obstacles and avoid them as much as possible in the area that you are driving on.

You may have to install ramps at entries of exit doors as well as remove or cover threshold strips between rooms.

To better maintain your center of balance while operating through obstacles:

- Lean your body forward slightly as you move up and over an obstacle.
- Lean your body backward slightly as you move downward through an obstacle.

7.9 Operating on Slopes, Ramps and Hills

While operating on a slope, ramp or hilly terrain, the center of balance of yourself as well as your power chair changes.

WARNING

Operate only if you are sure it is safe to do so, have someone to help you when you are operating on a slope, ramp or hilly terrain.

Never attempt to operate on any terrain that has a slope steeper than 9 degrees.

Never attempt to operate on a slope or ramp if there is snow, ice, water or oil on it.

Avoid operating on a slope or ramp that has uneven surfaces or a change in the slope grade.

Be aware of slope that has a drop off at the bottom, a drop off as small as 3/4th of an inch can stop the front wheel and cause the power chair to tip forward.

Always go straight up and straight down while operating on a slope or ramp.

Make sure the slope or ramp is wide enough to operate, and always stay in the center while operating.

Maintain a slow, steady speed while operating on a slope or ramp, avoid sudden change of speed.

While going down a slope or ramp, if the power chair is descending too fast, center the joystick to slow it down.

Never attempt to cut corner, turn or change direction on a slope or ramp.

VII GENERAL SAFETY GUIDELINES

While operating on ramps at home and work, there are several things to look out for.

WARNING

Ramps should be built by licensed contractors and meet all safety requirements.
Slope of the ramps should not exceed 9 degrees.
Ramps should not have any uneven surface or obstacle.
Ramps should not have any drop offs at the bottom, a drop off as small as 3/4th of an inch can stop the front wheel and cause the power chair to tip forward.
Ramps that have open sides should be built with side rails to prevent your power chair from falling off the edge.
Ramps should be sturdy, can withstand the total weight of the user, power chair, the assistant and additional carriage.

7.10 Operating up and down the Stairs and Escalators

WARNING

Even with an assistant, never attempt to operate your power chair up and down the stairs or an escalator. Doing so may cause a fall over, resulting in serious injuries and/or damage to the power chair.

7.11 Operating on Power Chair Lifts

There are power chair lifts in transportation vehicles and buildings to help you to move from one level to another.

WARNING

If possible, have an assistant with you while using a power chair lift.
Make sure the power of the power chair is turned off. If you accidentally touch the joystick while the power is on, the power chair can possibly drive off the power chair lift, resulting in serious injuries and/or damage to the power chair.
Be aware of a power chair lift that has a drop off at the bottom, a drop off as small as 3/4th of an inch can stop the front wheel and cause the power chair to tip forward.

7.12 Operating on Curbs and Single Steps

WARNING

While operating on curbs and single steps, it is recommended to use a ramp as your power chair is not designed to operate on curbs and single steps that are more than 3/4th of an inch.

If you must operate on curbs and single steps that are steeper than 3/4th of an inch, have someone assist you with the process.

If you must operate on curbs and single steps that are steeper than 3/4th of an inch alone, drive straight up and down as much as possible at a slow, steady speed.

While operating on curbs and single steps, never attempt making turns.

7.13 Maintaining Balance while Operating

Maintaining balance while operating your power chair is extremely important, and your center of balance is affected by:

A. A change in your body position and posture.

B. A change in the distribution of weight on the power chair, such as adding or taking off carriage.

C. Adjusting seat height and angle.

D. Operating on ramp, slope, curb and single steps.

E. Modifying your power chair by adding components or changing parts.

WARNING

Always maintain both batteries are plugged into the chair while operating for balance of weights.

Losing center of balance while operating your wheel chair can result in falling or tipping over, to avoid this, reduce speed and operate at a steady speed when a change of balance occurs.

7.14 Getting on/off the Power Chair

WARNING

Getting on and off the power chair affects the center of balance of both you and your power chair. With improper techniques, falling or tipping over can occur, resulting in injuries and/or damage to the power chair.

WARNING

Make sure the power is turned off while you are getting on and off the power chair. If you accidentally touch the joystick while the power is on, the power chair can start moving during the getting on and off process.

Make sure you have enough space to maneuver while getting on and off the power chair.

Rotate the front wheels sideways while the power chair is stationary, this will give the power chair a better grip of the surface it's parked on.

Never attempt to stand on the footrests while getting on and off the power chair.

Be aware of the position of the footrests, it is possible to trip over it while getting on and off the power chair, fold it up if you have to.

Fold the armrest upward if you need more space while getting on and off the power chair.

7.15 Reaching or Leaning

WARNING

Reaching or leaning affects the center of balance of both you and your power chair. With improper techniques, falling or tipping over can occur, resulting in injuries and/or damage to the power chair.

WARNING

Make sure the power is turned off while you are reaching or leaning. If you accidentally touch the joystick while the power is on, the power chair can start moving during the reaching and leaning process.

Rotate the front wheels sideways while the power chair is stationary, this will give the power chair a better grip of the surface it's parked on.

Avoid shift or tilt your body sideways during the reaching and leaning process.

Never move out of the seat of your power chair during the reaching and leaning process, try to keep your back and rare end in contact with the backrest as much as possible.

Never attempt to pick up an item on the floor by reaching down between your knees.

Never attempt to reach with both hands. In case if you lose your balance, you may not be able to hold yourself to prevent a fall.

Never put pressure on the footrests while reaching or leaning.

Never attempt to reach for an item that is far, move your power chair as close as possible to the item that you wish to reach.

If possible, have an assistant to help you during the reaching or leaning process.

7.16 Dressing while Sitting in the Power Chair

WARNING

Dressing while sitting in the power chair affects the center of balance of both you and your power chair. With improper techniques, falling or tipping over can occur, resulting in injuries and/or damage to the power chair.

WARNING

Make sure the power is turned off when you are dressing while sitting in the power chair. If you accidentally touch the joystick while the power is on, the power chair can start moving during the dressing process. Rotate the front wheels as forward as possible, this will make the power chair more stable.

Avoid shift or tilt your body sideways during the dressing process.

Never move out of the seat of your power chair during the dressing process, try to keep your back and rear end in contact with the backrest as much as possible.

Never put pressure on the footrests while dressing.

If possible, have an assistant to help you during the dressing process.

7.17 Reverse Driving

WARNING

Reverse driving takes practice and time to get used to. Be cautious while driving in reverse, hitting an object during the process may result in falling.

- While driving in reverse, keep an eye on what's behind you to make sure the path is clear.
- Drive as slow and steady as possible.

7.18 Lifting the power chair

The total weight of your power chair including the batteries is 95lbs, it is recommended to take apart the power chair into 2 compartments and carry them individually for transportation.

WARNING

Lift the power chair with proper techniques to avoid injuries.

Never attempt to lift the power chair while the user is still sitting on it.

Make sure the power chair is taking apart into 2 pieces before attempting to lift the unit.

VIII COMPONENT SAFETY GUIDELINES

8.1 Armrests

WARNING

Never attempt to lift your power chair by its armrests, the armrests cannot bear the weight of this power chair.

Never attempt to sit on the armrests, doing so will damage the power chair and/or cause the power chair to tip over.

8.2 Batteries

WARNING

The lithium ion batteries on your power chair are custom designed to work only with Forcemech ARK, never attempt to use any other batteries for this power chair.

Always maintain both batteries plugged into the chair while operating.

Keep the batteries away from flammable sources, never transfer these batteries with flammable or combustible materials.

Never attempt to disassemble the batteries, they contain corrosive chemicals and may cause explosion.

Never attempt to use pliers or cable wires to connect the ends of the batteries directly, this can cause a short circuit.

Never attempt to operate the power chair while the batteries are charging.

Never attempt to charge the batteries with non-standard power supply, only use the battery charger provided by Forcemech.

Keep children away from the power chair while the batteries are charging.

8.3 Fasteners

WARNING

If you choose to adjust, repair or maintain your power chair, make sure all fasteners are secured back to their normal position.

These fasteners on your power chair are custom designed to work only with Forcemech ARK, never attempt to use any other fasteners.

Periodically check the fasteners to make sure they are secured.

Never over or under tighten fasteners.

8.4 Footrests

WARNING

Never attempt to lift your power chair by its footrests, the footrests cannot bear the weight of this power chair.
Never attempt to stand on the footrests, doing so will damage the power chair and/or cause the power chair to tip over.
While moving your feet, be careful not to get caught in the space between the footrests and the power chair.
While getting on/off the power chair, be careful not to get tripped over by the footrests.

8.5 Controller

WARNING

The controller effectively controls the movement of your power chair. Before operating the power chair for the first time, it is extremely important for you to understand the features and settings of the joystick controller. Read over the Joystick Controller setup and settings section under section VI Controller Operation, take some time to practice operating your power chair in a safe environment before operating in the public.

WARNING

Check and verify the controller settings every six months.
The maximum operating speed is 4 miles or 6.5km per hour.
Slow down your power chair while turning to avoid losing balance.
Contact Forcemech immediately if you notice there's a change to the settings of the controller.

8.6 Motor Brakes

WARNING

Never attempt to lock or unlock the motor brakes unless the power of your power chair is turned off.

During the manual/free wheel mode, your power chair does not have any braking mechanism, make sure your assistant has full control while he/she is pushing.

Make sure the power chair is operating on a flat terrain when you switch the power chair to its manual/free wheel mode.

8.7 Power ON/OFF Button

WARNING

Never attempt to turn off the power switch to stop the power chair unless there's an emergency. Doing so will cause the power chair to stop suddenly, and may throw you off balance and fall from the power chair.

8.8 Seat and Backrest Cushion

WARNING

Both seat and backrest cushion of your power chair are designed for comfort, not for relief of pressure.

When placing the seat cushion and backrest cushion on your power chair, make sure you align them with the VELCRO hook and loop fasteners on the power chair.

9.1 What is Electromagnetic Interference?

Electromagnetic Interference (EMI), also called radio-frequency interference (RFI), is a disturbance generated by an external source such as mobile phones, walkie-talkie, radio/TV stations and electric power transmission lines. This disturbance can affect an electrical circuit and even stop it from functioning.

9.2 Sources of EMI

There are generally three types of electromagnetic interference:

A. Hand held transmitter receivers:

a) Citizens band radios

b) Mobile phones and walkie-talkie

c) Security, fire and police radios

B. Medium range transmitter receivers:

a) Radio sources used by police cars, fire trucks, ambulances and taxis; these usually have antenna mounted on the outside of the vehicle.

C. Long range transmitter receivers:

a) Radio sources used by commercial radio and TV broadcast towers as well as amateur (HAM) radios

9.3 Effects of EMI on Power Chair



WARNING

Electromagnetic interference may trigger the brakes of the power chair to lose control, causing the power chair to move by itself. This could bring serious injuries to the power chair user and considerable damage to the power chair.

9.4 Resistance to EMI

The higher the EMI resistance is, the less likely the electronic device will be affected by EMI. Our power chair has passed the test of electromagnetic/radio frequency resistance of 20 V/M, and this should protect the power chair from most common sources of radio waves.

9.5 EMI Sources that are Relatively Safe

These devices are not likely to cause problems to the power chair:

A. Laptops (without a phone or fax machine)

B. AM/FM radios

C. CD/cassette players

D. Cell Phones / Cordless phones

E. Electric shavers and hair dryers

9.6 Preventive Actions

Even though your power chair is equipped with anti-interference ability, users should note the following:



WARNING

Avoid using devices such as citizens band radios, mobile phones, walkie-talkie, laptop while operating the power chair.

Avoid getting into close proximity with nearby transmitter receivers such as radio and TV stations.

In case the brake loses control, and the power chair is moving by itself, turn off the power chair as soon as it is safe to do so.

Avoid modifying parts or adding accessories to the power chair not certified by Forcemech as these actions may affect the EMI resistance, making the power chair more susceptible to EMI sources.

9.7 EMI Incidents Report

If you experience unintended movement or brake release while operating the power chair, and there's an EMI source nearby, please report this incident to us.

X BATTERY MAINTENANCE

10.1 Charging the Batteries

WARNING

Before charging the batteries, make sure your power chair is powered off. Always connect the battery charger to the power chair or individual battery first, then connect the battery charger to a wall outlet. Disconnect by unplug the battery charger from the wall outlet first, then disconnect from the power chair.

Forcemech ARK comes with one lithium ion battery. Use standard current (AC 110-220V, 50-60Hz) to charge the batteries.

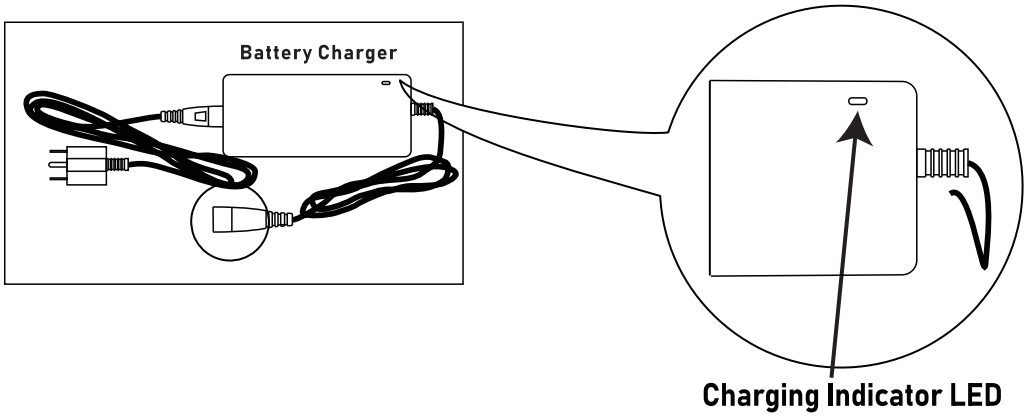

After connecting the Battery Charger:

A. The battery is charging when the indicator of the charger turns RED; when the indicator turns from RED to GREEN, the batteries are fully charged.

B. Once the batteries are fully charged, disconnect the charging cable from the joystick or the battery charging port.

C. It takes approximately 6-8 hours to fully recharge the batteries.

10.2 Maximizing the Life Cycles of the Batteries

Always have both batteries plugged into the chair while operating, to ensure both batteries have the same life cycle and to maintain balance of the chair. The batteries have approximately 500 recharge cycles, we recommend our users to recharge the batteries when their remaining power is low. You can check the battery power level by looking at the battery level indicator on the joystick controller or press the battery button on the battery indicator.

10.3 Battery Change

WARNING

Read the following instructions carefully before attempting to remove and change the Forcemech ARK battery..

Powertrain Compartment

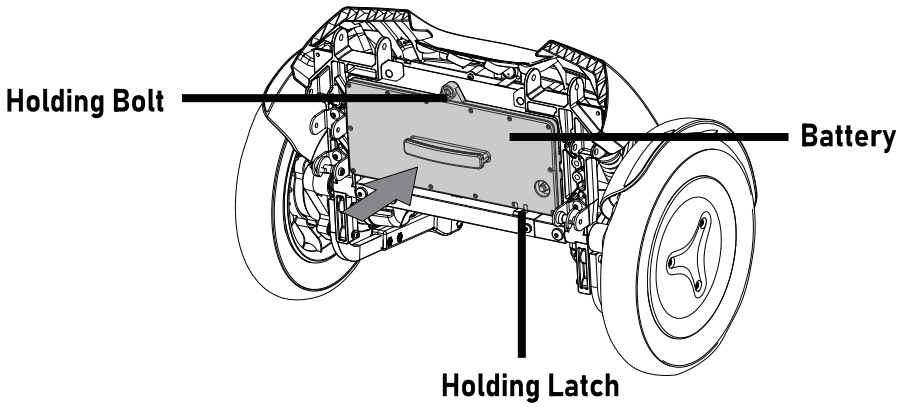

Install and Removal of Battery:

A. Secure the battery to the power assembly by manually tightening the screws, ensuring they are firmly locked.

B. To remove the battery, Loosen the Holding Bolt and press down on the battery Holding Latch to make removal easier.

C. Double check to make sure battery is securely seated before joining the Powertrain Compartment to the Chair Compartment again.

10.4 Battery Replacement

1. **If the battery performance weakens, such as unusually short usage time after charging, it indicates the battery is nearing the end of its lifespan.**
2. **Only qualified technical personnel from the company are authorized to perform maintenance and replacement operations.**
3. **If you believe battery replacement is necessary, please contact your dealer or Forcemech's customer service for assistance.**

10.5 Over Discharge Protection

Your power chair comes with an over discharge protection device. In case the batteries run out of power while the power chair is operating, the over discharge protection will stop the power chair from operating to protect the batteries from getting any potential damage.

10.6 Over Current Protection

Your power chair also comes with an over current protection device. In case you encounter malfunctions while operating, the over current protection will cut off the current, stop the motors from running to protect the batteries and motors from getting any potential damage.

10.7 Cleaning the Batteries



WARNING

Periodically check the battery case, positive and negative terminals of the batteries for signs of corrosion.

Use dry, soft lint free cloth to clean the batteries from any dust or metal particles.

Never attempt to rinse the batteries with water.

10.8 Battery Storage

A. Always fully charge your batteries before storing them.

B. Store the batteries in a clean, dry area.

10.9 Battery Disposal



WARNING

Batteries that reach the maximize life cycles or corroded batteries are hazardous waste.

Contact your local recycling center for disposal of the batteries.

XI POWER CHAIR MAINTENANCE

We designed this power chair hoping to provide you comfort and mobility throughout your daily activities for many years to come, regular maintenance will both increase the lifespan and maintain the performance of this power chair.

11.1 Cleaning

WARNING

Clean your power chair often, wipe off any dust or dirt especially on or around motors and wheels.

Never attempt to clean your power chair with oil or chemical liquids.

Never attempt to use a water hose to rinse the power chair, clean the surface with a damp cloth, then use a lint free cloth to wipe off any water marks.

Wash the seat and backrest cushions only if necessary, they can be hand washed or machine washed cold water and tumble dry low.

11.2 Routine Check

WARNING

Regularly check the power chair for any loose fasteners. use the Free maintenance tools that came with the chair to tighten all screws and bolts.

Regularly check the cables and connectors to see if they are tightly connected. Reconnect any cables and connectors if they are loose.

Periodically check the batteries for any signs of corrosion.

11.3 Storage

WARNING

Store your power chair in a clean and dry area.

Perform a thorough check before operating the power chair after storage.

XII TROUBLESHOOTING

12.1 Troubleshooting and Diagnose Issues

Most electric wheelchair malfunctions are related to the battery, motor, and controller. If the speedometer gauge on the main controller LED screen blinks rapidly without the joystick being moved, it indicates that the controller has detected an issue with the wheelchair's electrical system. Follow these steps to address the issue:

1. **Turn off the control system's power.**
2. **Ensure all connections to the wheelchair's control system are properly secured.**
3. **Check the battery status.**
4. **If the issue cannot be identified, refer to the self-diagnosis chart to determine the possible cause of the fault.**
5. **Restart the power and attempt to operate the wheelchair. If the fault persists, turn off the control system and do not attempt to use the wheelchair further. Immediately contact your Forcemech or your Local Dealer for assistance.**

Indicator	Fault Type	Solution
Speed Level 1 Flashing	Left motor phase wire disconnected	Check the connection of the motor connector.
	Left motor electromagnetic brake wire disconnected	Check the connection of the brake connector.
Speed Level 2 Flashing	Right motor phase wire disconnected	Check the connection of the motor connector.
	Right motor electromagnetic brake wire disconnected	Check the connection of the brake connector.
Speed Level 3 Flashing	Joystick not centered	Move the joystick, ensure it is free of obstruction, and restart the system.
	Joystick disconnected	Contact Forcemech or your Local Dealer for Assistance
Speed Level 4 Flashing	Communication error between upper and lower controllers	Check the connection of the control connectors.
Speed Level 5 Flashing	Controller short-circuit	Restart the system or contact your dealer.
Battery Level 1 Flashing	Low battery voltage	Indicates low battery; prompt the user to recharge.
All Battery Level Flashing	High battery voltage	Battery voltage is too high (exceeding 32V national standard).

XIII WARRANTY

Forcemech International LLC. offers a limited warranty to your Forcemech ARK and its parts against defects in materials and/or workmanship, contact us immediately if you notice there is an ongoing issue with your power chair.

1. Main frame – five years
2. Motors – two years
3. Electronics – one year
4. Batteries – one year
5. Controllers – one year

There are exclusions to our limited warranty:

1. Damage to the power chair caused by exceeding the weight limit of 330lbs.
2. Damage to the power chair caused by accidents or natural disasters.
3. Damage to the power chair due to improper use and handling.
4. Modifying power chair with unauthorized installation of components not from Forcemech.
5. Consumables such as cushions, tires and bearings are not covered.
6. This warranty does not apply to routine maintenance and adjustments.
7. This warranty only applies to the original buyer, and is not transferable.

Contact Forcemech

For questions on how to operate the chair, warranty claims, purchasing parts or any other issues you may have related to the power chair, please contact us. We will be happy to assist you.

by phone: 1-877-90-FORCE by email: support@forcemech.com

When contacting Forcemech, **please have one of the following ready** and we will be able to locate your order quickly to better assist you. **For warranty claims, it is required for us to verify your purchase**.

A. Serial Number (located on the back cover of this manual as well as on the chair at the inner side of the battery housing frame).

B. Order Number (if purchased online, from the retailer/online platform you purchased our chair from).

C. Purchase Receipt (if from a Local Dealer).

Register Your Product https://forcemech.com/register-a-product/

No reproduction in any form of this manual, in whole or in part (except for brief quotation in critical aricles or reviews), may be made without written authorization from Forcemech International LLC.



FORCEMECH ARK SERIAL NUMBER

Forcemech International LLC.

PHONE: 877-903-6723 EMAIL: support@forcemech.com

©2025 Forcemech International LLC.