FORCEMECH

Navigator PRO

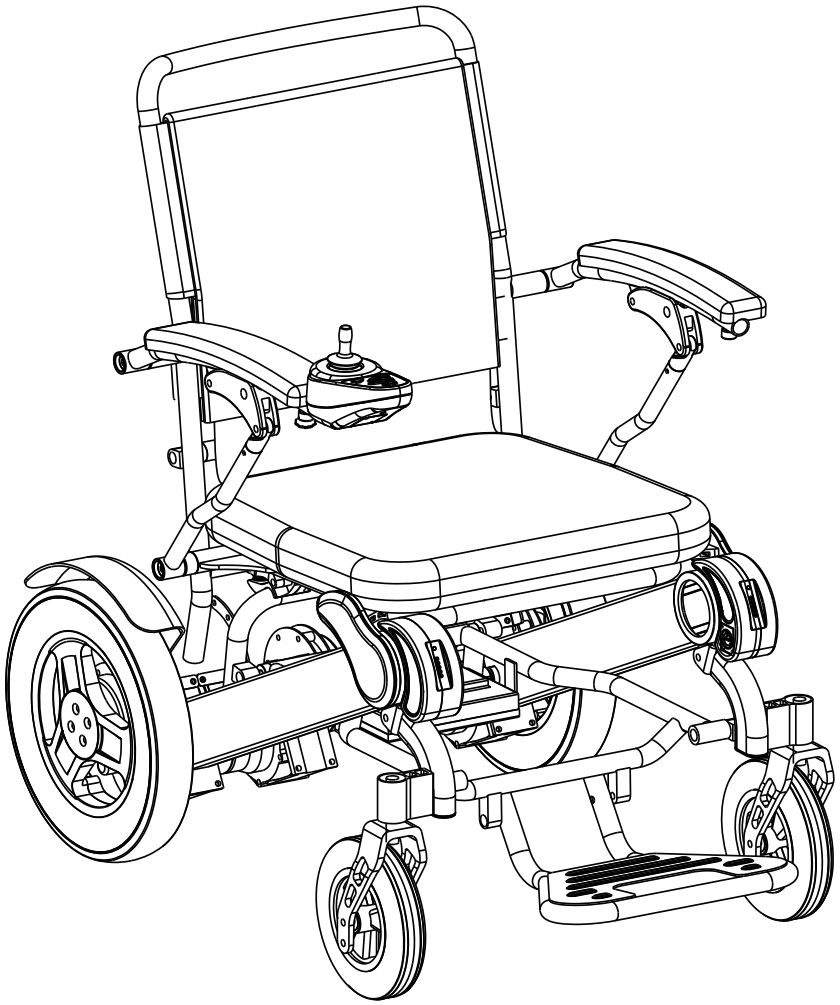

User Instructions Manual

With Quick Start Guide

www.forcemech.com

support@forcemech.com

TABLE OF CONTENTS

1. Introduction 3

2. Quick Start Guide 4

2.1 Parts List 4

2.2 First Time Setup 5

2.3 Folding the Chair 8

2.4 Travel Bag 11

2.5 Charging the Chair 12

2.6 Battery Operation 13

2.7 Controller Operation 14

2.8 Operation Safety 15

3. Features of your power chair 16

3.1 Parts of your Navigator PRO 16

3.2 Anti-Shock Systems 18

3.3 Navigator PRO Electrical Diagram 19

4. Specifications 20

5. General Safety Guidelines 21

5.1 Important Notice 21

5.2 Weight Limit 22

5.3 Sitting in the Power Chair while it's Stationary 22

5.4 Operating Environment 22

5.5 Operating Terrain 23

5.6 Operating on the Road 23

5.7 Motor Vehicle Safety 24

5.8 Operating Through Obstacles 25

5.9 Operating on Slopes, Ramps and Hills 25

5.10 Operating up and down the Stairs and Escalators 26

5.11 Operating on Power Chair Lifts 26

5.12 Operating on Curbs and Single Steps 27

5.13 Maintaining Balance while Operating 27

5.14 Getting on/off the Power Chair 27

5.15 Reaching or Leaning 28

5.16 Dressing while Sitting in the Power Chair 29

5.17 Reverse Driving 29

5.18 Lifting the Power Chair 29

TABLE OF CONTENTS

6. Component Safety Guidelines 30
- *6.1 Armrests* 30
- *6.2 Batteries* 30
- *6.3 Fasteners* 30
- *6.4 Footrests* 31
- *6.5 Controller* 31
- *6.6 Motor Brakes* 32
- *6.7 Power ON/OFF Button* 32
- *6.8 Seat and Backrest Cushion* 32

7. Electromagnetic Interference 33
- *7.1 What is Electromagnetic Interference?* 33
- *7.2 Sources of EMI* 33
- *7.3 Effects of EMI on Power Chair* 33
- *7.4 Resistance to EMI* 33
- *7.5 EMI Sources that are Relatively Safe* 34
- *7.6 Preventive Actions* 34
- *7.7 EMI Incidents Report* 34

8. Battery Maintenance 35
- *8.1 Charging the Batteries* 35
- *8.2 Maximizing the Life Cycles of the Batteries* 35
- *8.3 Over Discharge Protection* 36
- *8.4 Over Current Protection* 36
- *8.5 Cleaning the Batteries* 36
- *8.6 Battery Storage* 36
- *8.7 Battery Disposal* 36

9. Power Chair Maintenance 37
- *9.1 Cleaning* 37
- *9.2 Routine Check* 37
- *9.3 Storage* 37

10. Troubleshooting 38
- *10.1 Common Issues* 38
- *10.2 Diagnostic System* 38
- *10.3 Diagnostic Chart* 39

11. Warranty 40

INTRODUCTION

Thank You for Choosing the Forcemech Navigator PRO Power Chair! We are honored to have you as a valued customer and take immense pride in crafting top-quality products. The Navigator PRO represents the pinnacle of our innovation and expertise, being the seventh generation of the esteemed Navigator Series. First introduced in 2017, the Navigator Series quickly became a game-changer in the mobility industry, earning multiple accolades for its superior design, reliability, and performance. Over the years, it has solidified its place as the flagship model of Forcemech, representing our unwavering commitment to quality and excellence.

Building on this proud legacy, the Navigator PRO incorporates significant advancements, including enhanced battery performance, unmatched riding comfort, and exceptional ease of use. By combining cutting-edge engineering with invaluable customer feedback, we have ensured that the Navigator PRO continues to set the standard for mobility solutions.

This power chair is designed to provide you with unparalleled comfort and mobility in your daily activities and to remain your steadfast companion on all the adventures ahead.

Before operating this power chair for the very first time, please read and follow all instructions in this manual carefully. To avoid personal injuries and/or damage to the power chair, it is very important for you to have a comprehensive knowledge of the features of this power chair. If you have any trouble understanding the instructions of this manual or require further assistance for setting up, operating, and the maintenance of this power chair, please contact us immediately.



This manual serves as the ultimate guideline for you, your assistant, or caretaker who's helping you with operating this power chair. Read this manual carefully and review it often until you are certain how to handle every procedure of operating this power chair. Forcemech and its affiliates cannot be held responsible for personal injuries or property damage caused by improper handling of the Forcemech power chair.

Your opinions are very important to us – if you have any comments on the functionality and safety of this power chair, or the contents of this manual, please feel free to call us at 1-877-90-FORCE
or email us at support@forcemech.com

A × 1 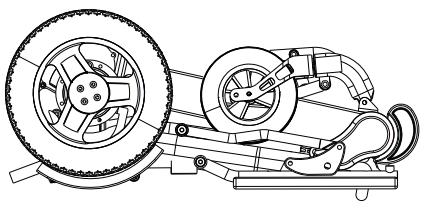 Forcemech Power Chair	B × 1 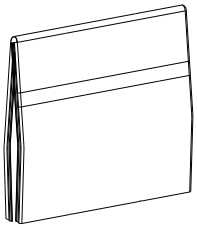 Back Rest Cushion
C × 1 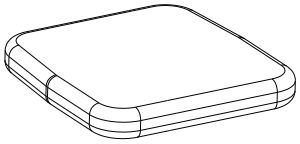 Seat Cushion	D × 1 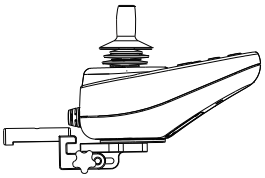 Controller
1 × 1 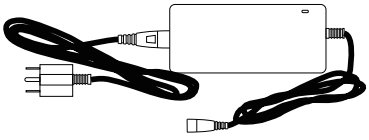 Battery Charger	2 × 1  Seat Belt
3 × 1 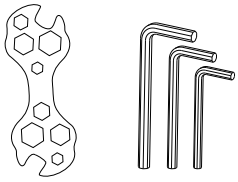 *Free Maintenance Tools	4 × 1 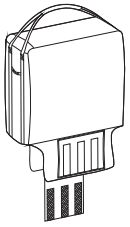 Travel Bag (Seperate Purcahse)

*Free Maintenance Tools are for use during regular self maintances, please see more info on section 9 of the manual.

STEP 1

Grab the backrest handle and top of the seat frame, pull apart to unfold.

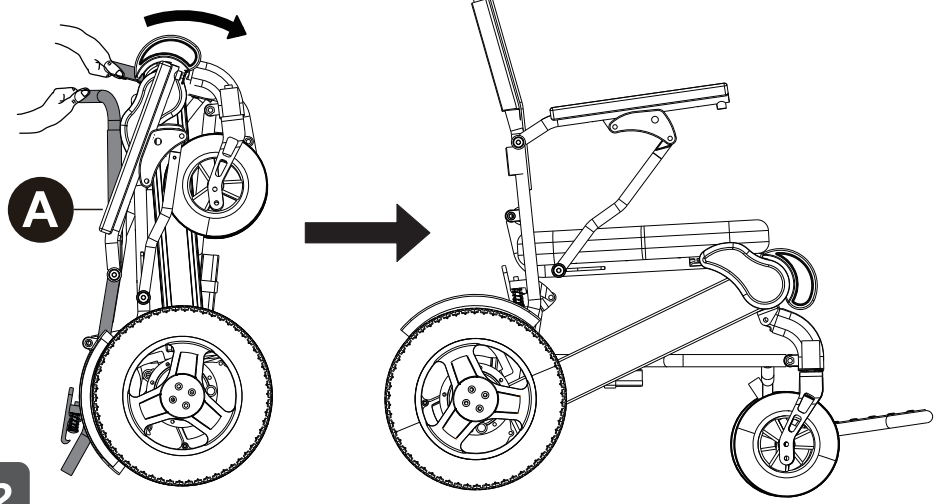

STEP 2

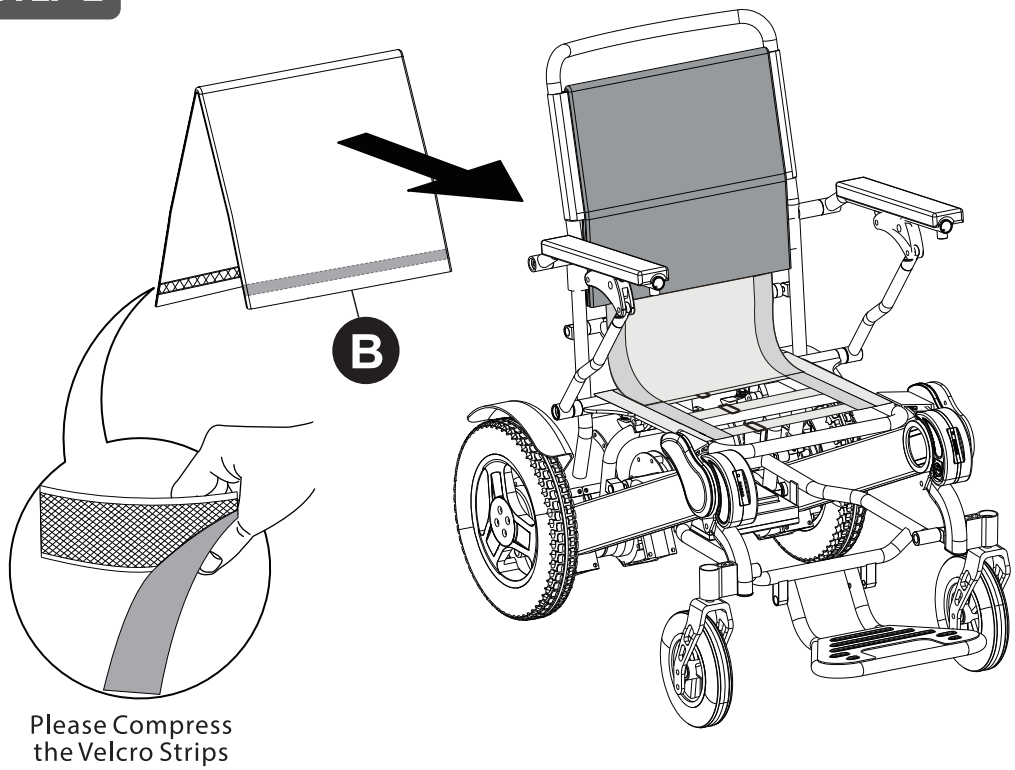

Please Compress the Velcro Strips

*Back Rest Cushion may come pre-installed with the chair.

STEP 3

Seat Cushion may be slightly deformed out of the box, this is normal and will inflate to its normal shape in a couple of days.

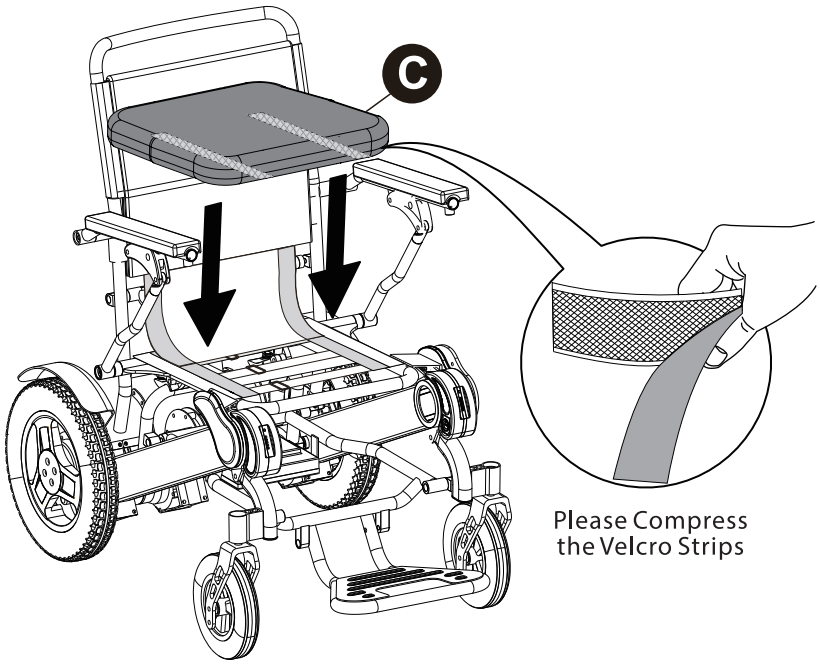

STEP 4

The Controller can be attached to either side of the armrest, cable from the CPU end may need to be rerouted if attaching to the left armrest.

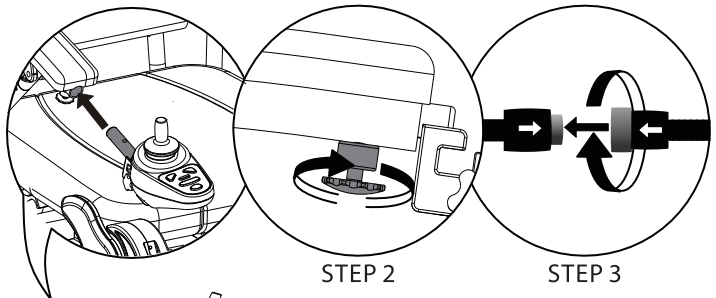

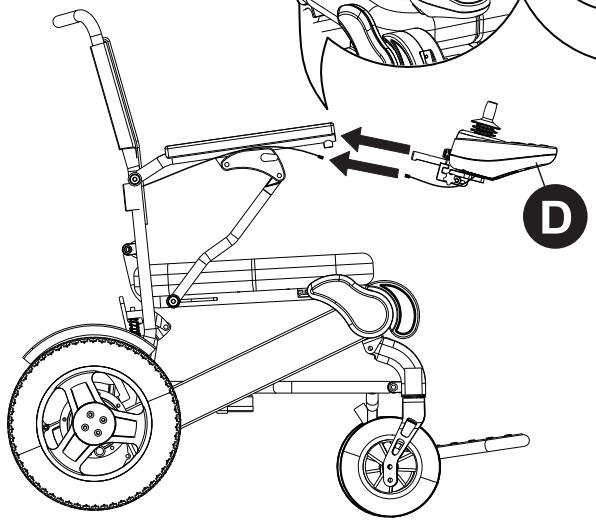

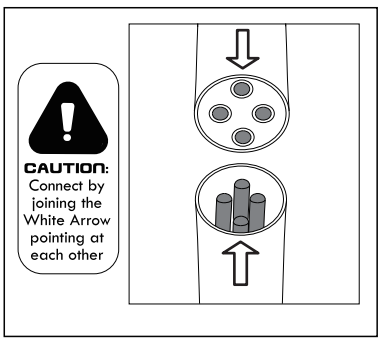

STEP 5

The chair's Armrest can be unlocked and raised up to adjust the resting position, or raised all the way up to moving the chair close to a table.

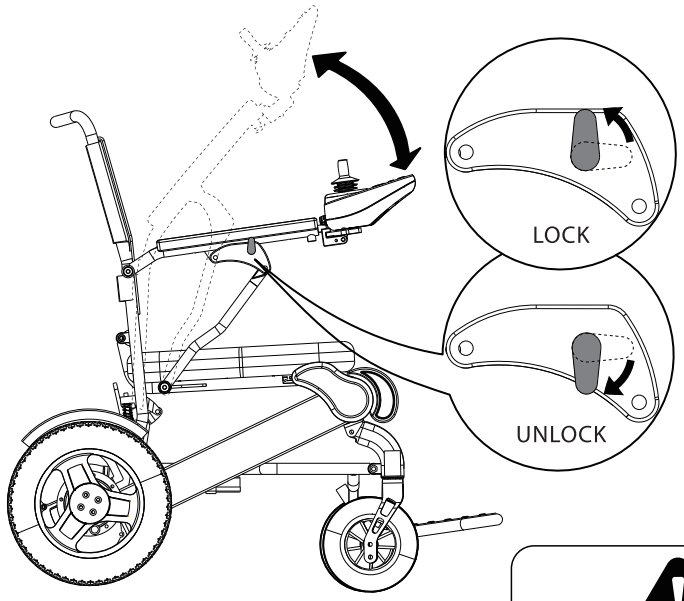

Chair will only be operatable with the Controller in Electric Mode.

Manual Mode disengages motor from battery and bring the chair into the Free-Wheel state for caretaker to push the chair from behind.

Manual Mode should be engaged for Dragging the Chair while folded in upright position.

STEP 6

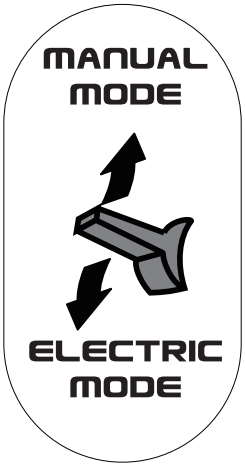

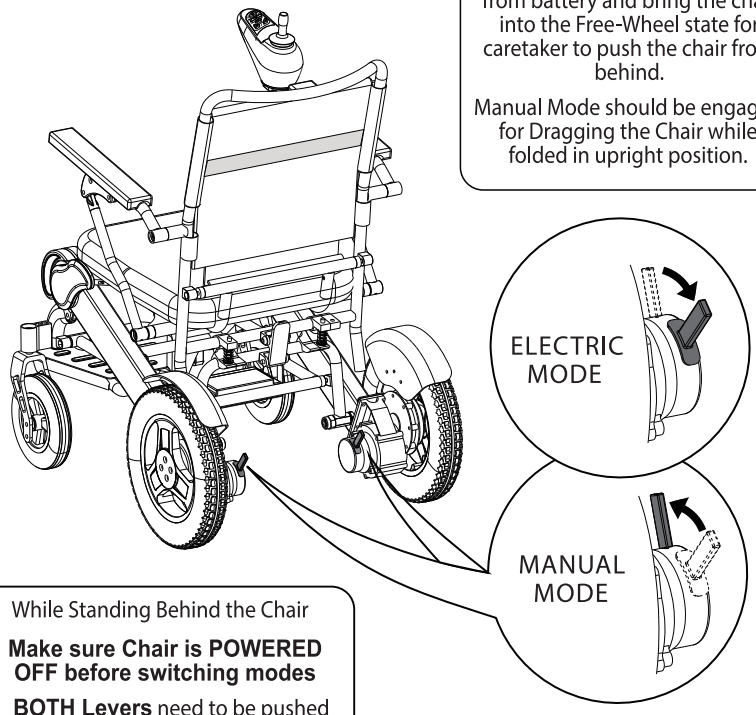

While Standing Behind the Chair

Make sure Chair is POWERED OFF before switching modes

BOTH Levers need to be pushed **Forward** to Engage **Manual Mode**

BOTH Levers need to be pushed **Backward** to Engage **Electric Mode**

STEP 7

While the Navigator PRO is designed to be able to fold while the seat cushion is attached in the chair, it is recommended to remove the seat cusion for optimal folded size.

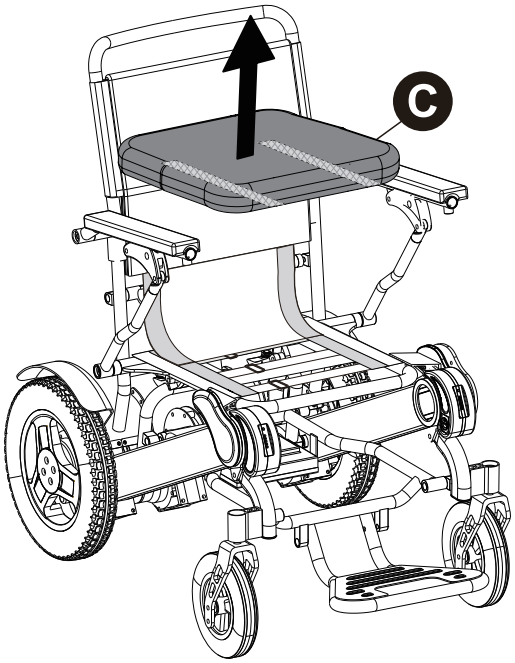

STEP 8

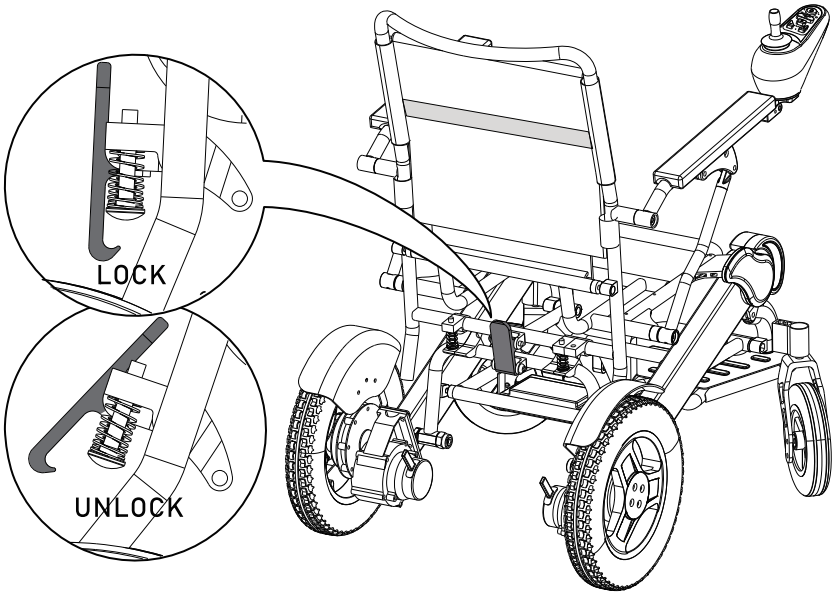



STEP 9

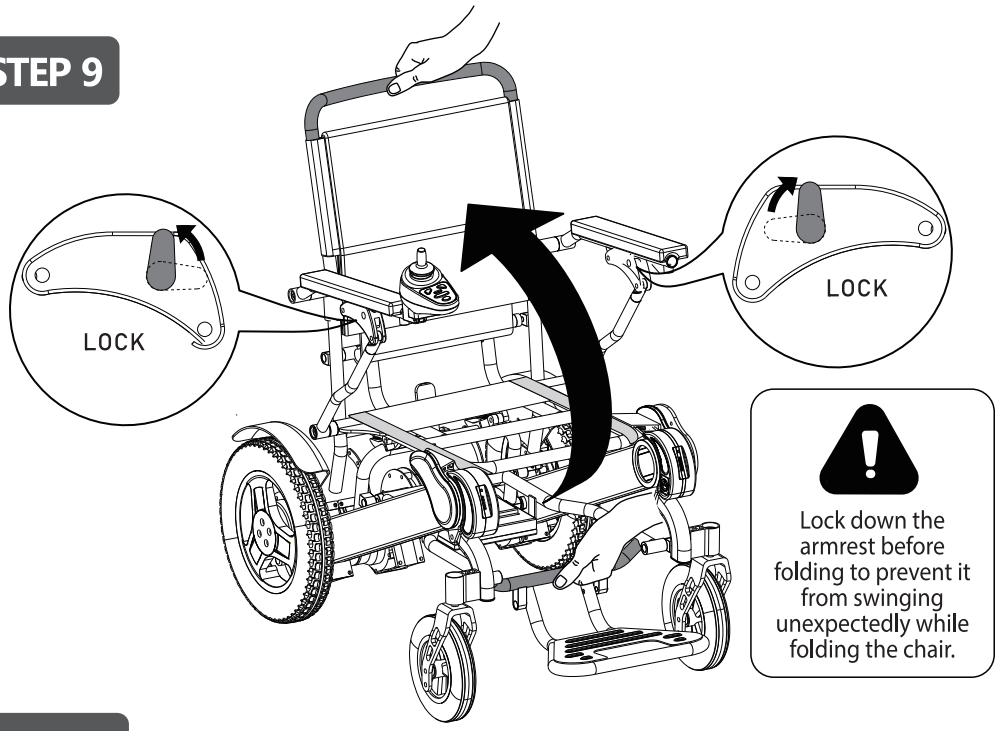

STEP 10

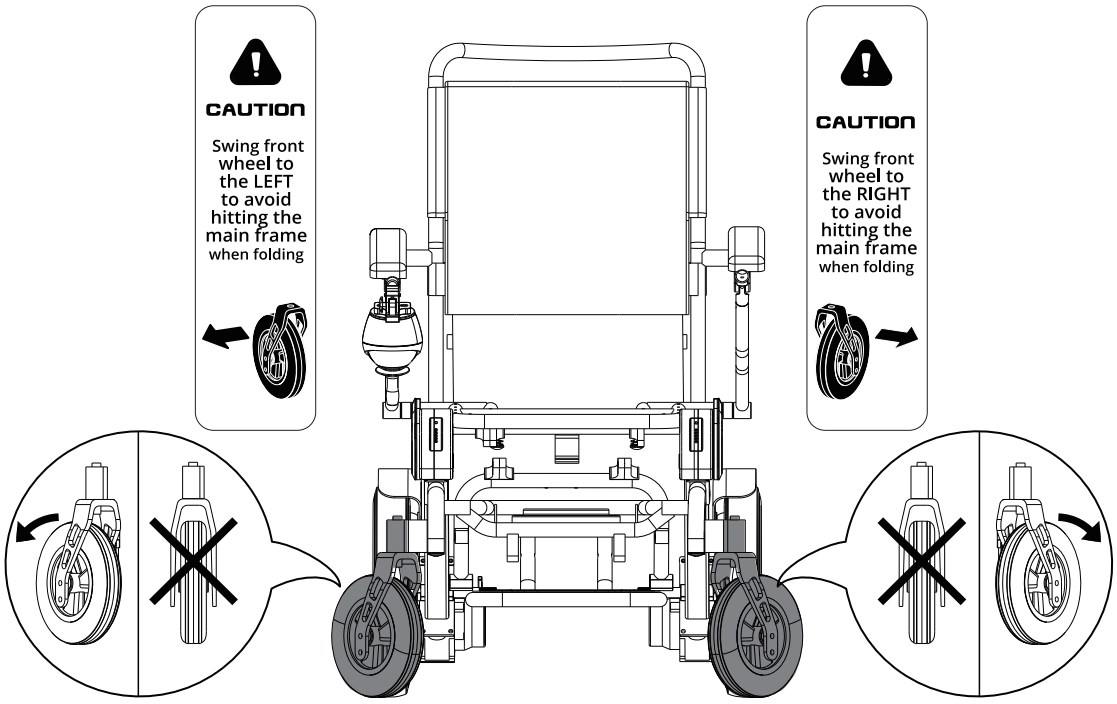

STEP 11

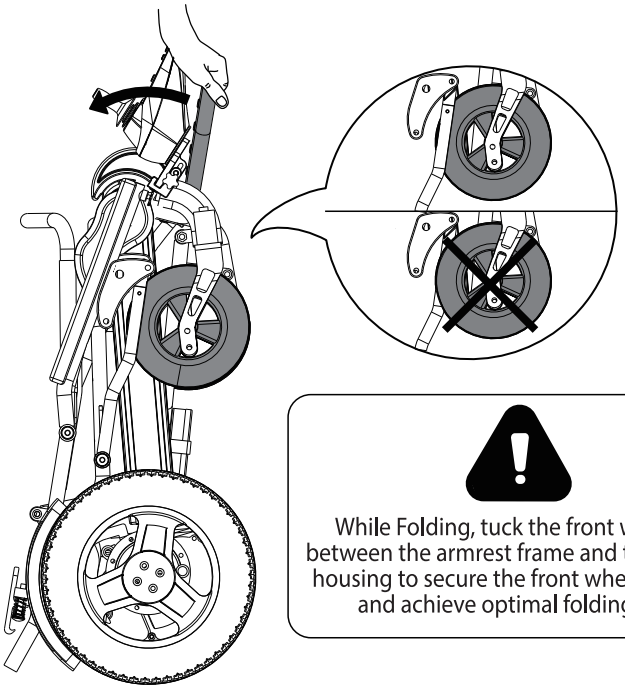

While Folding, tuck the front wheel in between the armrest frame and the battery housing to secure the front wheel in place and achieve optimal folding size.

STEP 12

The Navigator PRO has a quick release mechanism for folding down the joystick controller to reduce vertical size while the chair is folded.

To fold the controller, simply unlock the controller by loosen the screw knob locking the controller in place, turn the knob counter-clock wise, pull the controller away from the armrest, then fold down the controller.

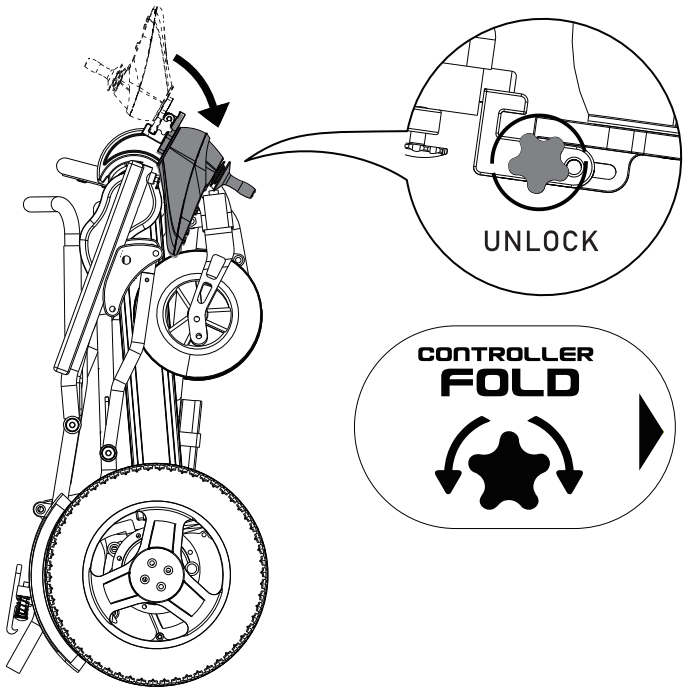

***The Travel Bag is a Custom Tailored Accessory for Separate Purchase.**

Prior to putting on the Travel Bag, make sure the chair is Folded, the Controller is Detached or Folded. Seat Cushion has been removed.

Engage the chair into Manual Mode if you wish to pull the chair around while it is in the Travel Bag.

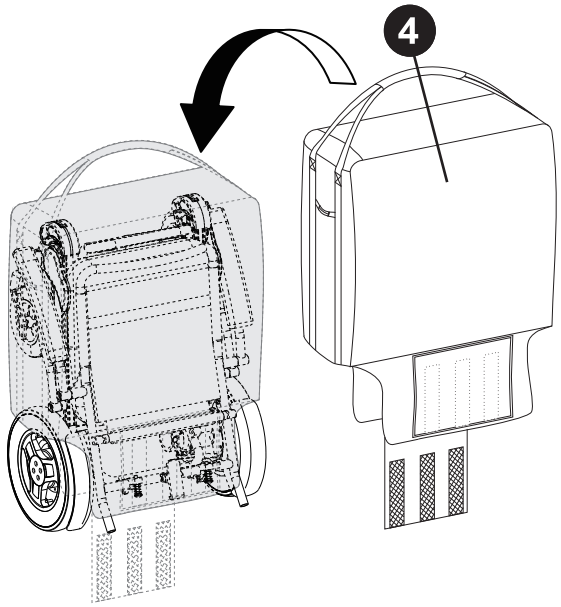

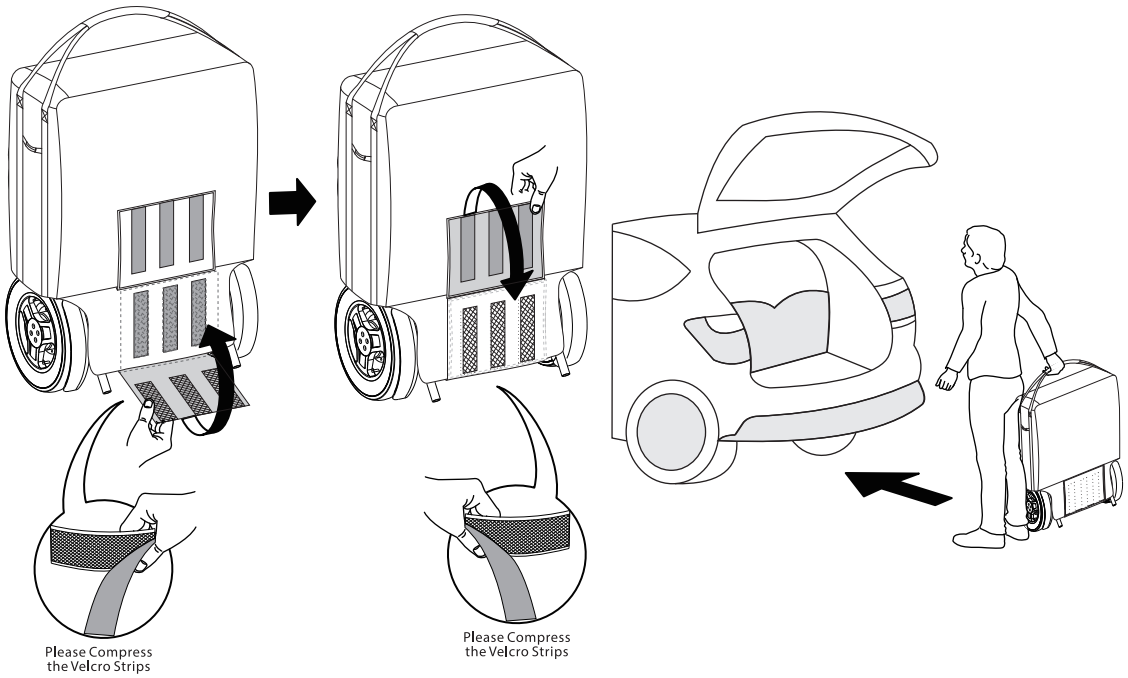

Make sure the chair is POWERED OFF before charging.

Charge the Battery by connecting the Charger to the **Main Power Charging Port** located under the Controller. Make sure the charger's male end is aligned with the female end on the controller. **This will charge both batteries.**

ONLY Charge through the Auxiliary Charging Port on the battery while the battery is pulled out of the chair. This function is for situations where the chair cannot be brought close to a wall plug.

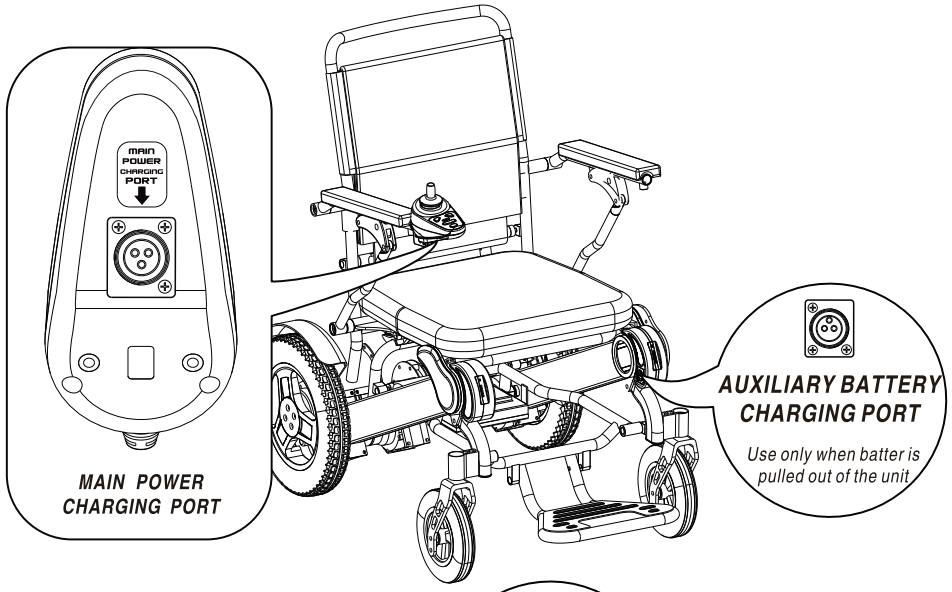

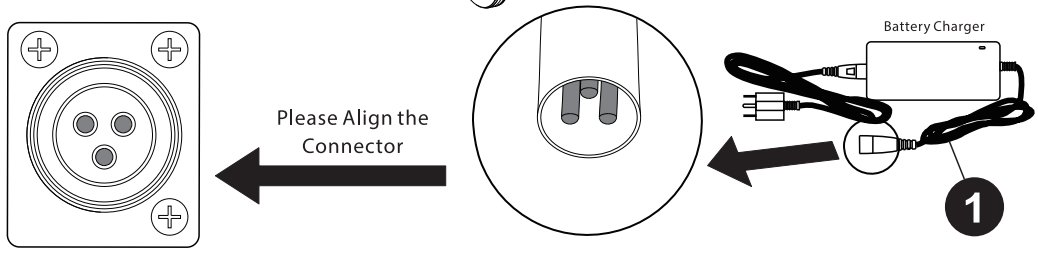

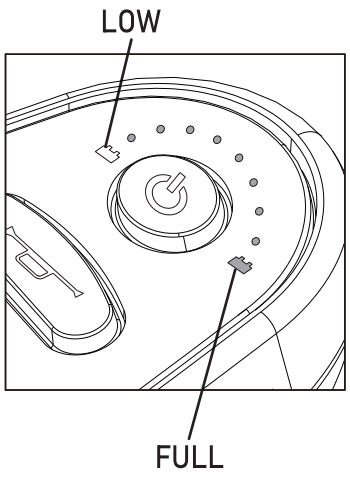

The LED battery level indicator located at the tip of the controller, next to the power on/off button indicates the remaining power of the whole chair. Check by simply turning on the chair.

The LED battery level indicator located on top of each battery indicates the remaining power of the current battery. Check by press and hold the green button next to the LED lights.

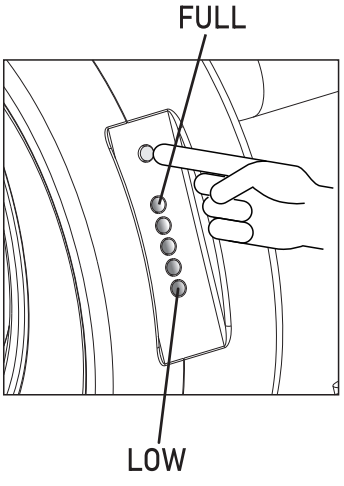

Both Batteries are interchangeble between the left and right Battery Slot in the Chair, though it is recommended to install the batteries with the charging port facing inside the Chair for aethetic purposes.

If you have an older model of the Navigator series chair, these new Lithium NCM batteries are backward compatible with all previous models, only much more powerful!

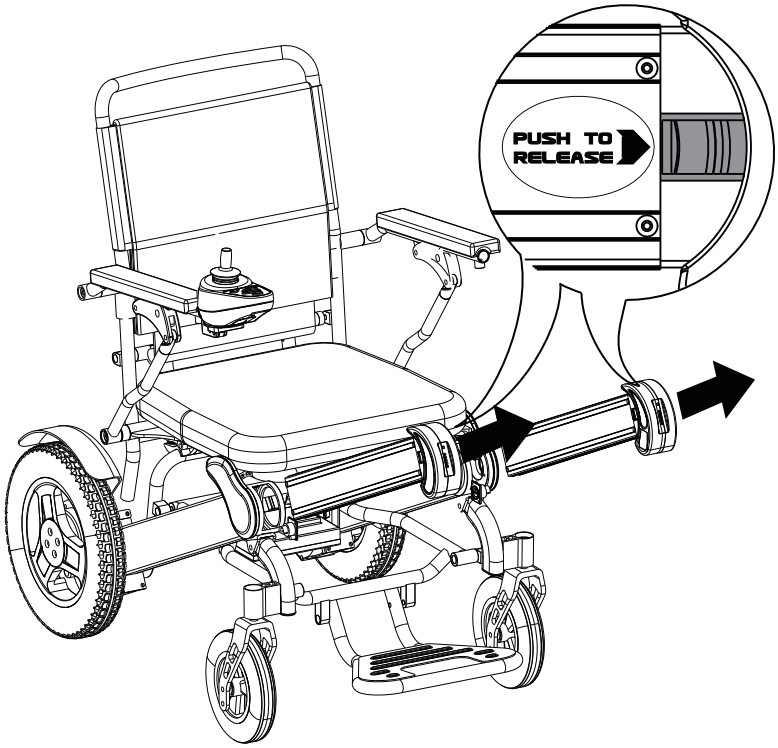

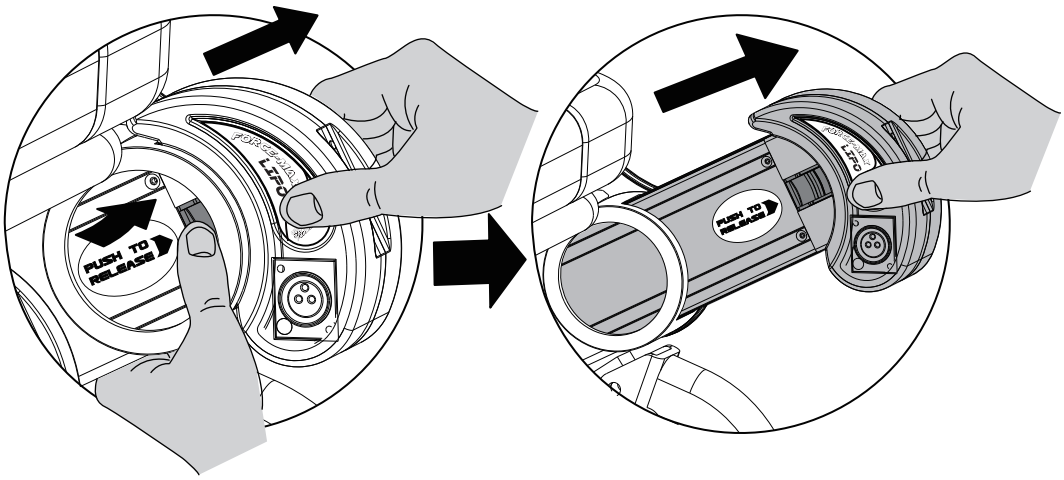

Press down on the Push To Release Latch and pull out the battery.

The Controller Diagram

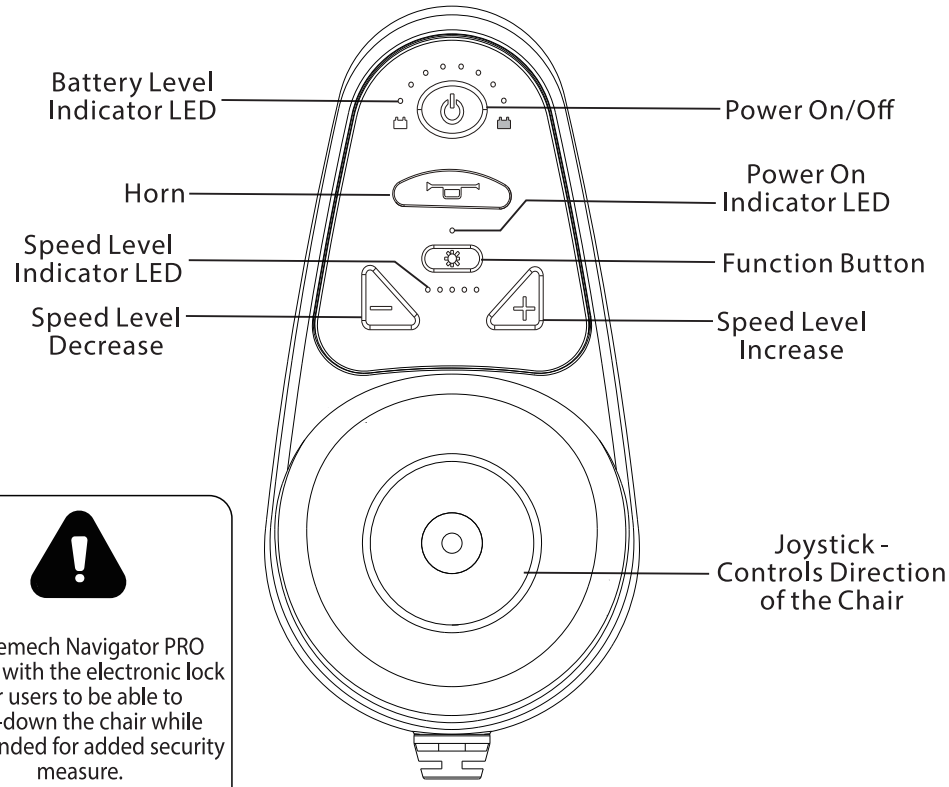

Forcemech Navigator PRO comes with the electronic lock for users to be able to lock-down the chair while unattended for added security measure.

How to Set Electronic Anti-Theft Lock

LOCK

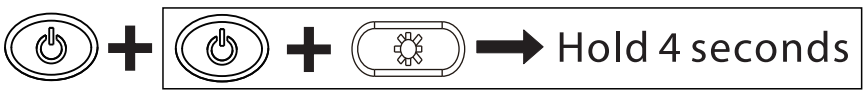

While the Controller is ON, Press and hold the Power On/Off button and the Function Button for 4 seconds to engage Electronic Lock, while locked, all controller input will be nullified.

UNLOCK



While the Controller is ON, Press the Speed Increase button 3 times consecutively to Release Electronic Lock.

DO NOT press the Function Button in any other fasion other than the Electronic Lock function or the chair may accidentally be put into maintenance mode and rendered in-operational.

Safety of Operation is very important to reduce the risk of potential accident that may cause harm to the operator and damage the chair.

Make sure that Seat Belt is worn at ALL TIMES while operating the chair.

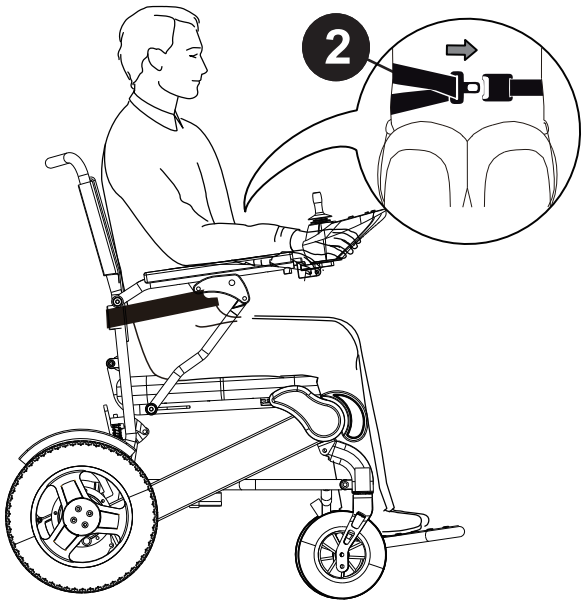

The chair is designed to handle maximum slope of 12 Degrees. Make sure to **avoid driving over slippery surface and any bumps or protruding objects** while going up or down any slopes. as it may significantly increase the risk of tipping over.

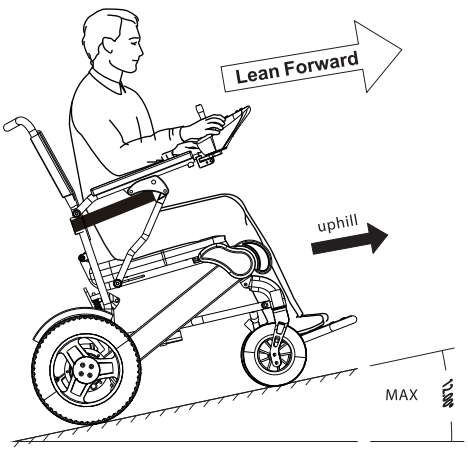

When going uphill, It is recommended to lean forward, which puts your center of gravity towards the front of the chair, this will reduce the risk of tipping.

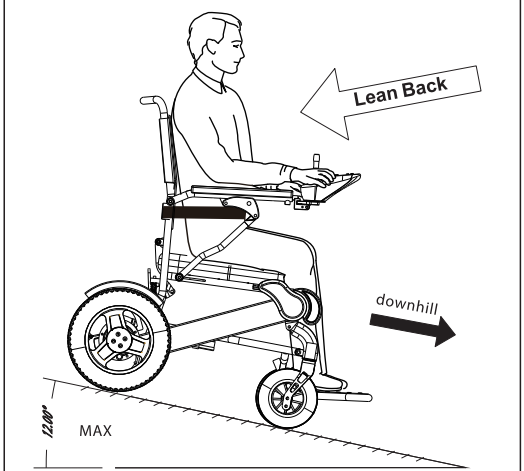

When going downhill, It is recommended to lean back, which puts your center of gravity towards the rear of the chair, this will reduce the risk of tipping.

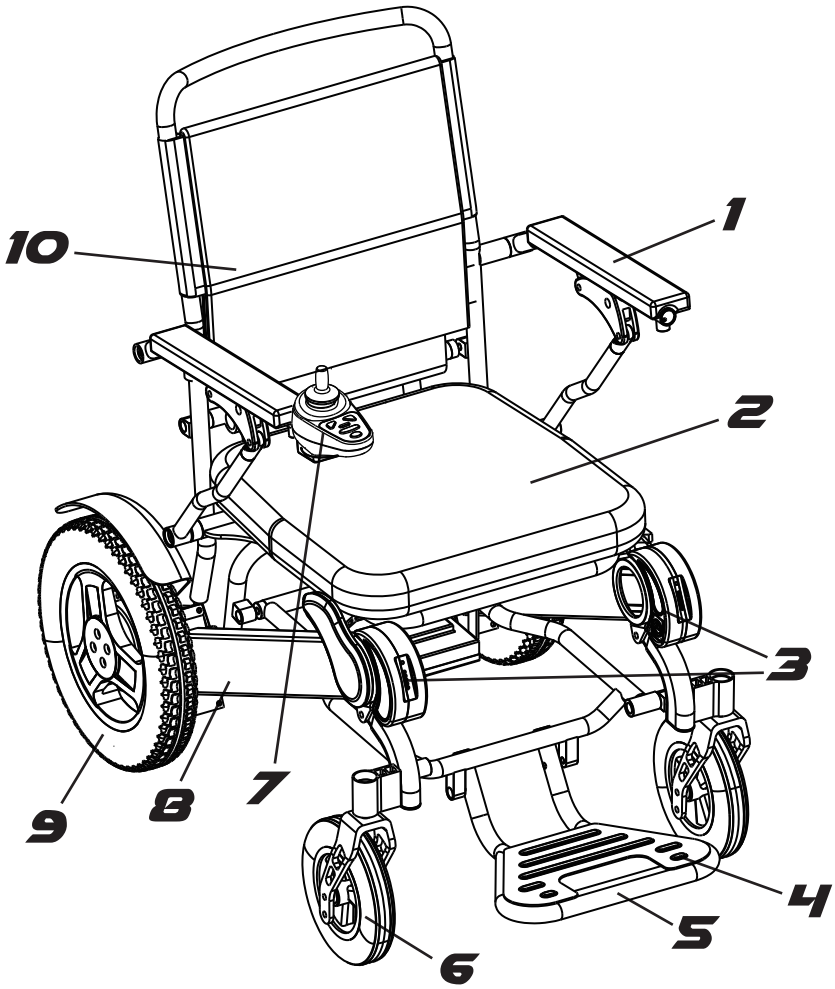

3.1 Parts of Your Navigator PRO (View From Front)

1. Armrest
2. Seat Cushion
3. Batteries
4. Footrest
5. Footrest Folding Handle
6. Front Wheel
7. Controller
8. Battery Housing
9. Drive Wheel
10. Backrest Cushion

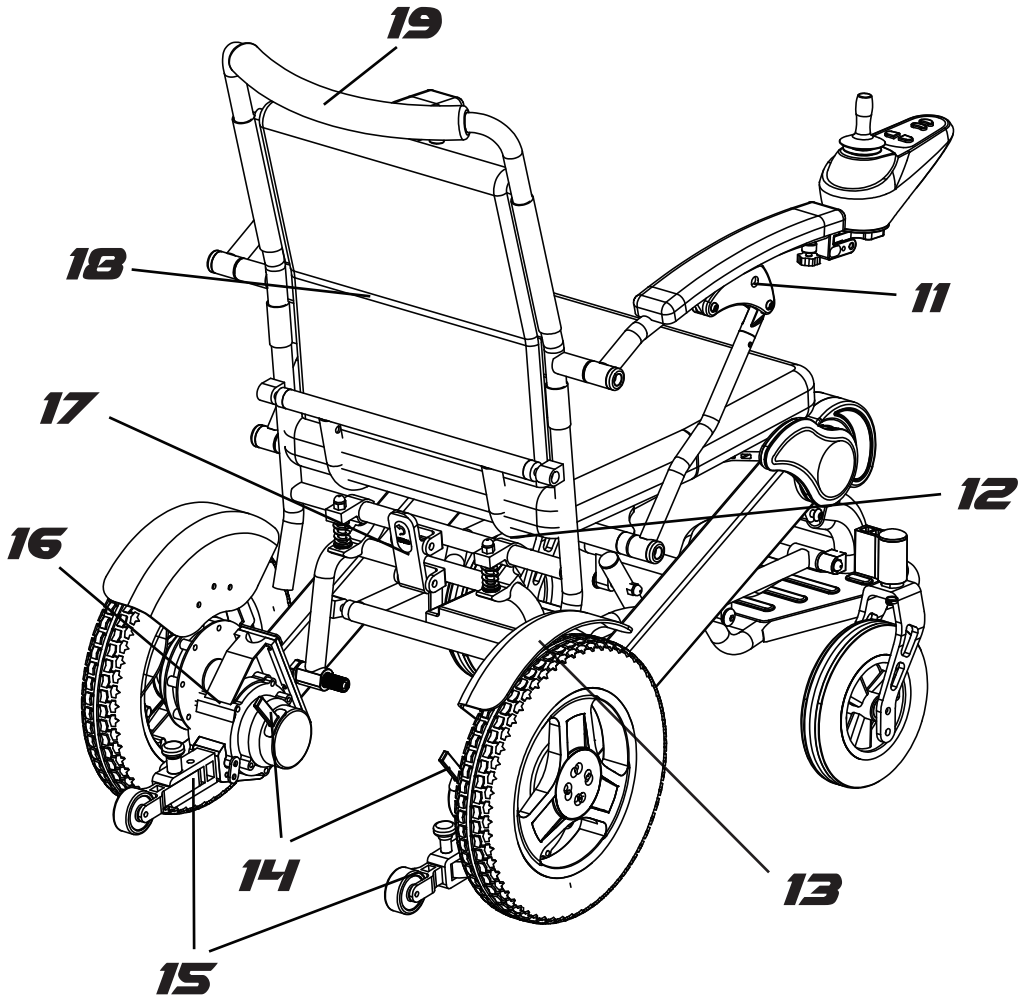

3.1 Parts of Your Navigator PRO (View From Back)

11. Armrest Release Latch
12. CPU Unit
13. Drive Wheel Fender
14. Electric/Manual Mode Switch Lever
15. Retractable Anti-Tip Wheels
16. Electric Motor
17. Folding Latch
18. Safety Reflective Fabric
19. Caretaker Push Handle

3.2 Anti-Shock Systems

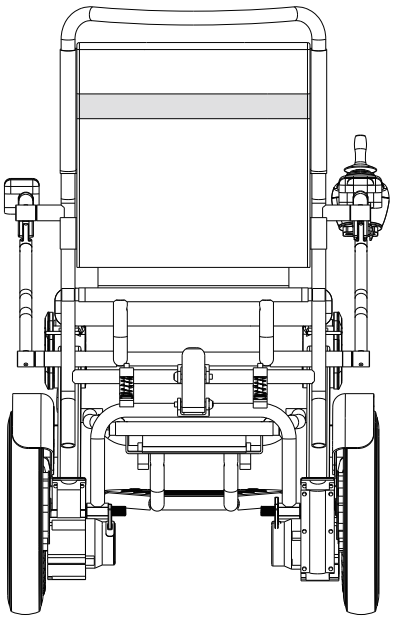

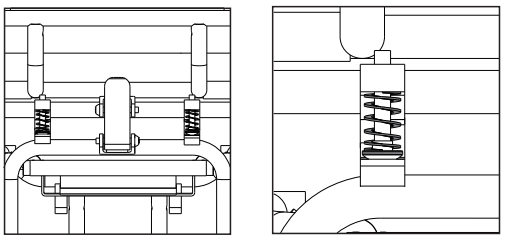

Anti-Shock Springs

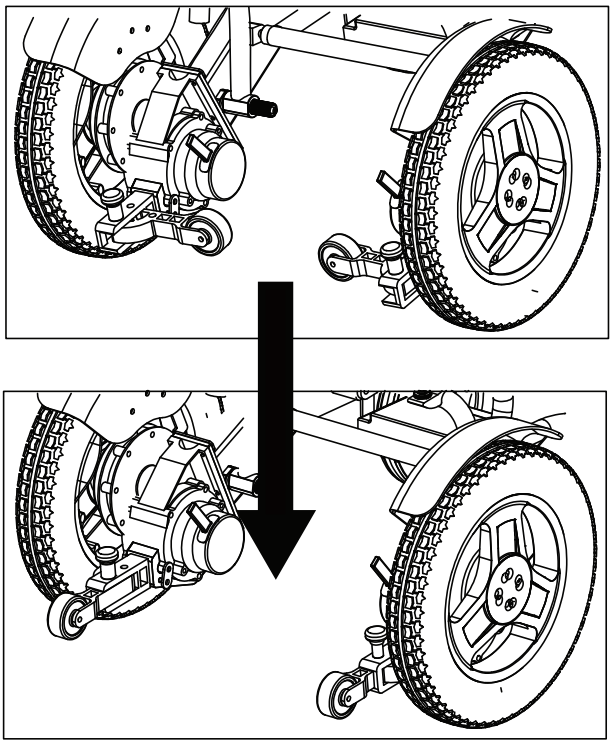

This Navigator PRO incorporated anti-tip wheels that is retractable, when going up hill, it is recommended to deploy the anti-tip wheels by pulling the folding lock pin and release the anti-tip wheels. To Fold, pull up the Folding Lock Pin and fold inwards towards the center of the chair and release the anti-tip wheels, it will lock securely in place.

Folding Lock Pin

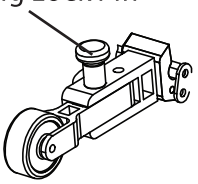

3.3 Navigator PRO Electrical Diagram

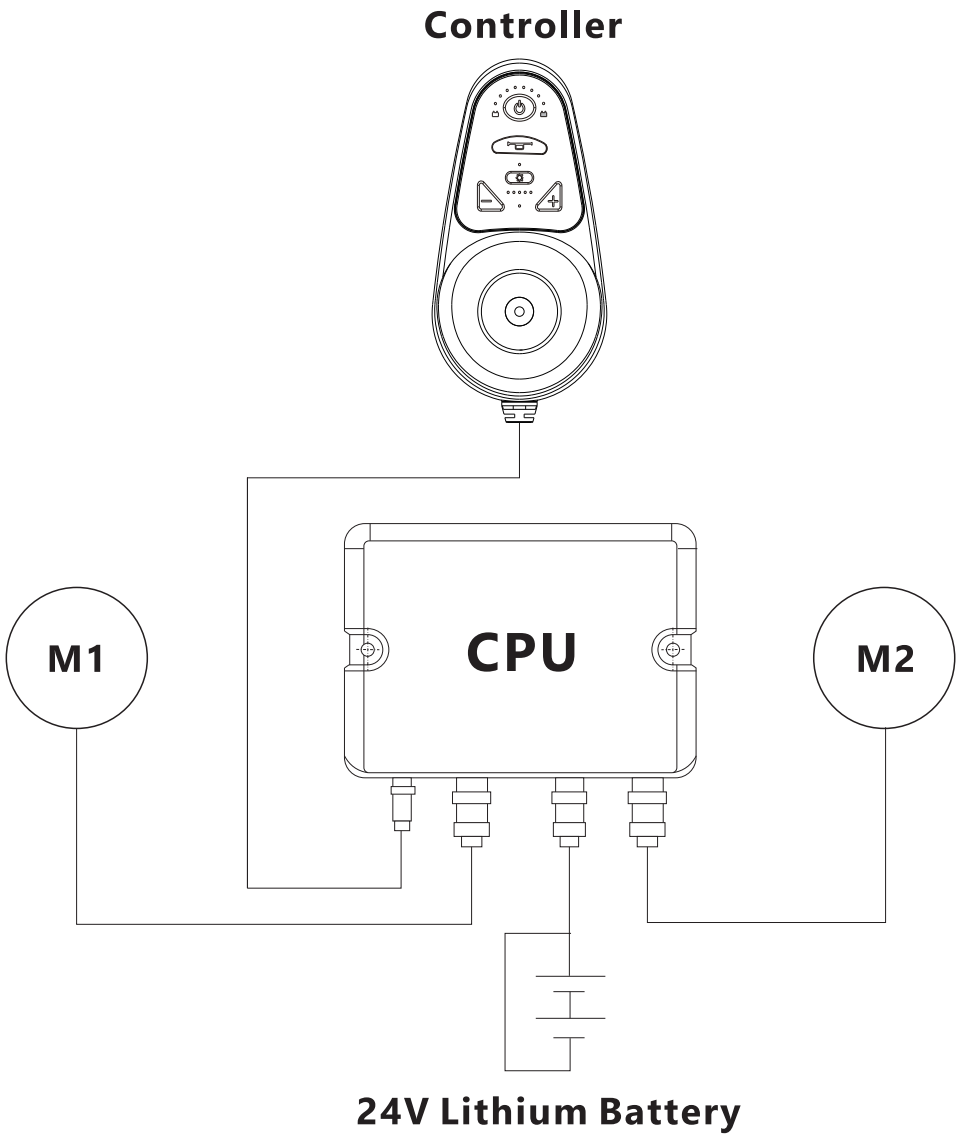

SPECIFICATIONS

Navigator PRO Specifications	
Power Chair Weight (Incl. Batteries)	60 Lbs.
Maximum Weight Capacity	400 Lbs.
Maximum Climbing Slope	12 Degrees
Maximum Speed	4.5 MPH
Maximum Travel Distance	*18 Miles
Unfolding Dimensions (L x W x H)	38'' x 24'' x 37''
Folding Dimensions (L x W x H)	24'' x 14'' x 31''
Armrest Height (From Ground)	28''
Seat Height (From Ground)	18''
Seat Cushion Size (L x W x H)	18'' x 18'' x 2.75''
Ground Clearance	3.5''
Frame Material	Aluminum Alloy
Wheels Material	Polyurethane
Size of the Front Wheels (D x W)	7'' x 1.8''
Size of the Rear Wheels (D x W)	12.5''x 2.3''
Power Chair Turning Radius	33''
Battery Type	Lithium NCM 622
Battery Capacity	6.6 Ah
Battery Voltage Output	DC 24V
Battery Weight	4 Lbs.
Motor Type	Brushless Eco-Drive
Motor Power	250W
Motor Voltage Input	DC 24V
Brake System	Intelligent Electromagnetic Brake
Controller Type	Dual Core Twin Drive
Controller Power Input	AC 100-220V, 50-60Hz
Voltage Output/Current	DC 24V, 2A
*Maximum Travel Distance measured with 150Lbs load travelling on flat surface, actual travel distance may vary under different load and road conditions.	

GENERAL SAFETY GUIDELINES

5.1 Important Notice

To User:



WARNING

Before operating your power chair for the first time, read over all the instructions on this manual carefully.

Before operating your power chair for the first time, take the time to become accustomed with the power chair until everything feels comfortable.

If you are operating the power chair with the help of an assistant, make sure the individual has also been thoroughly trained.

It takes time to get used to operating this power chair, have someone help you to perform actions such as leaning, stretching, reaching and dressing until you feel comfortable doing them on your own.

Do not attempt new maneuvers unless you know it is safe to do so.

Be aware of your surroundings and stay out of hazardous places.

While driving with maximum speed, do not attempt to make sharp turns.

Always wear your seat belt when operating the wheelchair.

To Attendant:



WARNING

Before assisting the power chair user for the first time, read over all the instructions on this manual carefully.

The power chair user's safety depends on you, help the user to develop safe habits of operating this power chair.

Do not attempt to sit or stand on this power chair while assisting its user.

Before pushing, make sure you switch the power chair to its manual/free wheel mode by turning off the electromagnetic brakes with the brake release lever.

Push the power chair by only using the push handle in the back of the power chair.

While pushing the power chair, do not attempt to make sharp turns.

5.2 Weight Limit

WARNING

The maximum load capacity of your power chair is 400lbs, the user plus all items carried should not exceed this load capacity.

Do not allow additional user to sit or stand on the power chair.

When you are weight lifting while sitting on the power chair, make sure the total weight of yourself and the weights does not exceed 400lbs.

Exceeding the weight limit will most likely damage the structure of the power chair and possibly cause injuries to its user.

Damage to the power chair caused by exceeding the weight limit voids the warranty.

5.3 Sitting in the Power Chair while it's Stationary

WARNING

Make sure you turn off the power of your power chair when it is parked, even for a short period of time to prevent power chair movement due to release of brake from EMI sources and/or accidental contact with the joystick.

5.4 Operating Environment

Motors, batteries and other power chair parts are not waterproof designed, contact with water or excessive moisture can corrode these parts as well as cause an electrical circuit failure. In order to avoid damaging the power chair, you should avoid the following operations:

WARNING

Avoid operating the power chair during heavy rain fall.

Avoid operating the power chair in snow or icy conditions.

Do not operate the power chair in the bath, sauna and swimming pool.

Avoid operating the power chair when you are nearing a water source (including rivers, lakes and oceans).

Make sure the battery cover is closed at all times.

Make sure all the electrical connections are safely secured.

Dry the power chair immediately if it gets hit by water.

Make sure the batteries are kept dry at all times.

5.5 Operating Terrain

WARNING

Your power chair is suitable for driving on concrete, asphalt and indoor floor surfaces.
Avoid driving in sandy, dirt-covered or rugged terrain, operating in such terrain can cause damage to the wheels, bearings, shaft or motors, as well as loose fasteners may occur.

WARNING

Never attempt to drive onto any slope or ramp greater than 12 degrees rise or drop.
Never attempt to operate on a slope or ramp if there is snow, ice, water or oil on it.
Never attempt to drive over any bump, rocks or any protruding objects as this will result in tipping over of the chair and cause harm to the operator and damage to the chair.
If you notice your power chair is losing traction, stop operating the power chair immediately. Turn off the chair and call caretaker for assistance.
Operate only if you are sure it is safe to do so, if you are stuck in a wet environment, seek help immediately.

5.6 Operating on the Road

WARNING

In most states, operating power chair on public roads is illegal, please consult your local department of transportation for instructions to operate your power chair in the public.

WARNING

Never attempt to operate your power chair on any roadways that prohibits the use of motor vehicles.
If you are operating in the public, be aware to the danger of motor vehicles on the roads and in parking lots.
If you are operating at night, it is recommended that you wear reflective clothing.

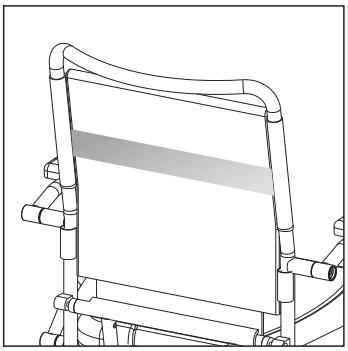

Forcemech's paint coat color is highly reflective, together with the iridescent reflective fabric on the back of the backrest cushion, which significantly increases the visibility of the power chair in the low light environment. However, caution must still be taken at low light and low visibility situations by the operator to ensure personal travel safety.

WARNING

Motor vehicle drivers may not notice you. While operating your power chair in the public, always make eye contacts with driver of the incoming vehicle before you go. If there's any doubt, yield until it is safe to operate.

5.7 Motor Vehicle Safety

As of today, the U.S. Department of Transportation has not approved any tie down system of transporting a power chair on a motor vehicle.

WARNING

Never sit on your power chair when you are on a moving motor vehicle. Any accident or immediate stop may throw you off the power chair.

Make sure you fasten your seat belt while sitting on a moving motor vehicle.

Always secure your power chair so it does not shift or roll on the motor vehicle.

Never transport this power chair in the front seat of a motor vehicle, it may shift and interfere with the driver.

5.8 Operating Through Obstacles

You will have to overcome some obstacles during your daily use of your power chair, these include but are not limited to ramps, door thresholds, lifts, potholes and broken pavements.

WARNING

If you attempt to operate your power chair through obstacles, a change of height may stop the wheels, therefore causing a fall, tip-over or loss of control, potentially injure its user and damage the power chair.

While operating your power chair, beware of obstacles and avoid them as much as possible in the area that you are driving on.

You may have to install ramps at entries of exit doors as well as remove or cover threshold strips between rooms.

To better maintain your center of balance while operating through obstacles:

- Lean your body forward slightly as you move up and over an obstacle.
- Lean your body backward slightly as you move downward through an obstacle.

5.9 Operating on Slopes, Ramps and Hills

While operating on a slope, ramp or hilly terrain, the center of balance of yourself as well as your power chair changes.

WARNING

Operate only if you are sure it is safe to do so, have someone to help you when you are operating on a slope, ramp or hilly terrain.

Never attempt to operate on any terrain that has a slope steeper than 12 degrees.

Never attempt to operate on a slope or ramp if there is snow, ice, water or oil on it.

Avoid operating on a slope or ramp that has uneven surfaces or a change in the slope grade.

Be aware of slope that has a drop off at the bottom, a drop off as small as 3/4th of an inch can stop the front wheel and cause the power chair to tip forward.

Always go straight up and straight down while operating on a slope or ramp.

Make sure the slope or ramp is wide enough to operate, and always stay in the center while operating.

Maintain a slow, steady speed while operating on a slope or ramp, avoid sudden change of speed.

While going down a slope or ramp, if the power chair is descending too fast, center the joystick to slow it down.

Never attempt to cut corner, turn or change direction on a slope or ramp.

While operating on ramps at home and work, there are several things to look out for.

WARNING

Ramps should be built by licensed contractors and meet all safety requirements.
Slope of the ramps should not exceed 12 degrees.
Ramps should not have any uneven surface or obstacle.
Ramps should not have any drop offs at the bottom, a drop off as small as 3/4th of an inch can stop the front wheel and cause the power chair to tip forward.
Ramps that have open sides should be built with side rails to prevent your power chair from falling off the edge.
Ramps should be sturdy, can withstand the total weight of the user, power chair, the assistant and additional carriage.

5.10 Operating up and down the Stairs and Escalators

WARNING

Even with an assistant, never attempt to operate your power chair up and down the stairs or an escalator. Doing so may cause a fall over, resulting in serious injuries and/or damage to the power chair.

5.11 Operating on Power Chair Lifts

There are power chair lifts in transportation vehicles and buildings to help you to move from one level to another.

WARNING

If possible, have an assistant with you while using a power chair lift.
Make sure the power of the power chair is turned off. If you accidentally touch the joystick while the power is on, the power chair can possibly drive off the power chair lift, resulting in serious injuries and/or damage to the power chair.
Be aware of a power chair lift that has a drop off at the bottom, a drop off as small as 3/4th of an inch can stop the front wheel and cause the power chair to tip forward.

5.12 Operating on Curbs and Single Steps

WARNING

While operating on curbs and single steps, it is recommended to use a ramp as your power chair is not designed to operate on curbs and single steps that are more than 3/4th of an inch.

If you must operate on curbs and single steps that are steeper than 3/4th of an inch, have someone assist you with the process.

If you must operate on curbs and single steps that are steeper than 3/4th of an inch alone, drive straight up and down as much as possible at a slow, steady speed.

While operating on curbs and single steps, never attempt making turns.

5.13 Maintaining Balance while Operating

Maintaining balance while operating your power chair is extremely important, and your center of balance is affected by:

A. A change in your body position and posture.

B. A change in the distribution of weight on the power chair, such as adding or taking off carriage.

C. Adjusting seat height and angle.

D. Operating on ramp, slope, curb and single steps.

E. Modifying your power chair by adding components or changing parts.

WARNING

Always maintain both batteries are plugged into the chair while operating for balance of weights.

Losing center of balance while operating your wheel chair can result in falling or tipping over, to avoid this, reduce speed and operate at a steady speed when a change of balance occurs.

5.14 Getting on/off the Power Chair

WARNING

Getting on and off the power chair affects the center of balance of both you and your power chair. With improper techniques, falling or tipping over can occur, resulting in injuries and/or damage to the power chair.

WARNING

Make sure the power is turned off while you are getting on and off the power chair. If you accidentally touch the joystick while the power is on, the power chair can start moving during the getting on and off process.

Make sure you have enough space to maneuver while getting on and off the power chair.

Rotate the front wheels sideways while the power chair is stationary, this will give the power chair a better grip of the surface it's parked on.

Never attempt to stand on the footrests while getting on and off the power chair.

Be aware of the position of the footrests, it is possible to trip over it while getting on and off the power chair, fold it up if you have to.

Fold the armrest upward if you need more space while getting on and off the power chair.

5.15 Reaching or Leaning

WARNING

Reaching or leaning affects the center of balance of both you and your power chair. With improper techniques, falling or tipping over can occur, resulting in injuries and/or damage to the power chair.

WARNING

Make sure the power is turned off while you are reaching or leaning. If you accidentally touch the joystick while the power is on, the power chair can start moving during the reaching and leaning process.

Rotate the front wheels sideways while the power chair is stationary, this will give the power chair a better grip of the surface it's parked on.

Avoid shift or tilt your body sideways during the reaching and leaning process.

Never move out of the seat of your power chair during the reaching and leaning process, try to keep your back and rare end in contact with the backrest as much as possible.

Never attempt to pick up an item on the floor by reaching down between your knees.

Never attempt to reach with both hands. In case if you lose your balance, you may not be able to hold yourself to prevent a fall.

Never put pressure on the footrests while reaching or leaning.

Never attempt to reach for an item that is far, move your power chair as close as possible to the item that you wish to reach.

If possible, have an assistant to help you during the reaching or leaning process.

5.16 Dressing while Sitting in the Power Chair

WARNING

Dressing while sitting in the power chair affects the center of balance of both you and your power chair. With improper techniques, falling or tipping over can occur, resulting in injuries and/or damage to the power chair.

WARNING

Make sure the power is turned off when you are dressing while sitting in the power chair. If you accidentally touch the joystick while the power is on, the power chair can start moving during the dressing process. Rotate the front wheels as forward as possible, this will make the power chair more stable.

Avoid shift or tilt your body sideways during the dressing process.

Never move out of the seat of your power chair during the dressing process, try to keep your back and rear end in contact with the backrest as much as possible.

Never put pressure on the footrests while dressing.

If possible, have an assistant to help you during the dressing process.

5.17 Reverse Driving

WARNING

Reverse driving takes practice and time to get used to. Be cautious while driving in reverse, hitting an object during the process may result in falling.

- While driving in reverse, keep an eye on what's behind you to make sure the path is clear.
- Drive as slow and steady as possible.

5.18 Lifting the power chair

The total weight of your power chair including the batteries is 59lbs, if you or your assistant choose to lift the power chair, be aware of the following.

WARNING

Lift the power chair with proper techniques to avoid injuries.

Never attempt to lift the power chair while the user is still sitting on it.

Make sure the power chair is folded completely before attempting to lift the unit.

COMPONENT SAFETY GUIDELINES

6.1 Armrests

WARNING

Never attempt to lift your power chair by its armrests, the armrests cannot bear the weight of this power chair.

Never attempt to sit on the armrests, doing so will damage the power chair and/or cause the power chair to tip over.

6.2 Batteries

WARNING

The lithium ion batteries on your power chair are custom designed to work only with Forcemech Navigator series, never attempt to use any other batteries for this power chair.

Always maintain both batteries plugged into the chair while operating.

Keep the batteries away from flammable sources, never transfer these batteries with flammable or combustible materials.

Never attempt to disassemble the batteries, they contain corrosive chemicals and may cause explosion.

Never attempt to use pliers or cable wires to connect the ends of the batteries directly, this can cause a short circuit.

Never attempt to operate the power chair while the batteries are charging.

Never attempt to charge the batteries with non-standard power supply, only use the battery charger provided by Forcemech.

Keep children away from the power chair while the batteries are charging.

6.3 Fasteners

WARNING

If you choose to adjust, repair or maintain your power chair, make sure all fasteners are secured back to their normal position.

These fasteners on your power chair are custom designed to work only with Forcemech Navigator series, never attempt to use any other fasteners.

Periodically check the fasteners to make sure they are secured.

Never over or under tighten fasteners.

6.4 Footrests



WARNING

Never attempt to lift your power chair by its footrests, the footrests cannot bear the weight of this power chair.
Never attempt to stand on the footrests, doing so will damage the power chair and/or cause the power chair to tip over.
While moving your feet, be careful not to get caught in the space between the footrests and the power chair.
While getting on/off the power chair, be careful not to get tripped over by the footrests.

6.5 Controller



WARNING

The controller effectively controls the movement of your power chair. Before operating the power chair for the first time, it is extremely important for you to understand the features and settings of the joystick controller. Read over the Joystick Controller setup and settings section under section 2.7 Controller Operation, take some time to practice operating your power chair in a safe environment before operating in the public.



WARNING

Check and verify the controller settings every six months.
The maximum operating speed is 4 miles per hour.
Slow down your power chair while turning to avoid losing balance.
Contact Forcemech immediately if you notice there's a change to the settings of the controller.

6.6 Motor Brakes

WARNING

Never attempt to lock or unlock the motor brakes unless the power of your power chair is turned off.

During the manual/free wheel mode, your power chair does not have any braking mechanism, make sure your assistant has full control while he/she is pushing.

Make sure the power chair is operating on a flat terrain when you switch the power chair to its manual/free wheel mode.

6.7 Power ON/OFF Button

WARNING

Never attempt to turn off the power switch to stop the power chair unless there's an emergency. Doing so will cause the power chair to stop suddenly, and may throw you off balance and fall from the power chair.

6.8 Seat and Backrest Cushion

WARNING

Both seat and backrest cushion of your power chair are designed for comfort, not for relief of pressure.

When placing the seat cushion and backrest cushion on your power chair, make sure you align them with the VELCRO hook and loop fasteners on the power chair.

ELECTROMAGNETIC INTERFERENCE

7.1 What is Electromagnetic Interference?

Electromagnetic Interference (EMI), also called radio-frequency interference (RFI), is a disturbance generated by an external source such as mobile phones, walkie-talkie, radio/TV stations and electric power transmission lines. This disturbance can affect an electrical circuit and even stop it from functioning.

7.2 Sources of EMI

There are generally three types of electromagnetic interference:

A. Hand held transmitter receivers:

a) Citizens band radios

b) Mobile phones and walkie-talkie

c) Security, fire and police radios

B. Medium range transmitter receivers:

a) Radio sources used by police cars, fire trucks, ambulances and taxis; these usually have antenna mounted on the outside of the vehicle.

C. Long range transmitter receivers:

a) Radio sources used by commercial radio and TV broadcast towers as well as amateur (HAM) radios

7.3 Effects of EMI on Power Chair



WARNING

Electromagnetic interference may trigger the brakes of the power chair to lose control, causing the power chair to move by itself. This could bring serious injuries to the power chair user and considerable damage to the power chair.

7.4 Resistance to EMI

The higher the EMI resistance is, the less likely the electronic device will be affected by EMI. Our power chair has passed the test of electromagnetic/radio frequency resistance of 20 V/M, and this should protect the power chair from most common sources of radio waves.

7.5 EMI Sources that are Relatively Safe

These devices are not likely to cause problems to the power chair:

A. Laptops (without a phone or fax machine)

B. AM/FM radios

C. CD/cassette players

D. Cell Phones / Cordless phones

E. Electric shavers and hair dryers

7.6 Preventive Actions

Even though your power chair is equipped with anti-interference ability, users should note the following:

WARNING

Avoid using devices such as citizens band radios, mobile phones, walkie-talkie, laptop while operating the power chair.

Avoid getting into close proximity with nearby transmitter receivers such as radio and TV stations.

In case the brake loses control, and the power chair is moving by itself, turn off the power chair as soon as it is safe to do so.

Avoid modifying parts or adding accessories to the power chair not certified by Forcemech as these actions may affect the EMI resistance, making the power chair more susceptible to EMI sources.

7.7 EMI Incidents Report

If you experience unintended movement or brake release while operating the power chair, and there's an EMI source nearby, please report this incident to us.

BATTERY MAINTENANCE

8.1 Charging the Batteries

WARNING

Before charging the batteries, make sure your power chair is powered off. Always connect the battery charger to the power chair or individual battery first, then connect the battery charger to a wall outlet. Disconnect by unplug the battery charger from the wall outlet first, then disconnect from the power chair.

Forcemech Navigator PRO comes with two lithium ion batteries, and there are two ways to charge them. Use standard current (AC 110-220V, 50-60Hz) to charge the batteries. (see section 2.5 of the Quick Start Guide for details on charging ports)

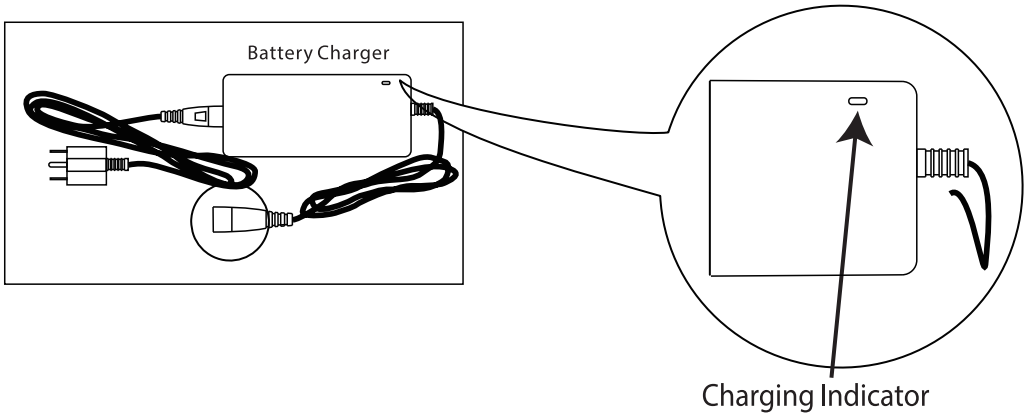

After connecting the Battery Charger:

A. The battery is charging when the indicator of the charger turns RED; when the indicator turns from RED to GREEN, the batteries are fully charged.

B. Once the batteries are fully charged, disconnect the charging cable from the joystick or the battery charging port.

C. It takes approximately 6-8 hours to fully recharge the batteries.

8.2 Maximizing the Life Cycles of the Batteries

Always have both batteries plugged into the chair while operating, to ensure both batteries have the same life cycle and to maintain balance of the chair. The batteries have approximately 500 recharge cycles, we recommend our users to recharge the batteries when their remaining power is low. You can check the battery power level by looking at the battery level indicator on the joystick controller or press the battery button on the battery indicator.

8.3 Over Discharge Protection

Your power chair comes with an over discharge protection device. In case the batteries run out of power while the power chair is operating, the over discharge protection will stop the power chair from operating to protect the batteries from getting any potential damage.

8.4 Over Current Protection

Your power chair also comes with an over current protection device. In case you encounter malfunctions while operating, the over current protection will cut off the current, stop the motors from running to protect the batteries and motors from getting any potential damage.

8.5 Cleaning the Batteries



WARNING

Periodically check the battery case, positive and negative terminals of the batteries for signs of corrosion.

Use dry, soft lint free cloth to clean the batteries from any dust or metal particles.

Never attempt to rinse the batteries with water.

8.6 Battery Storage

A. Always fully charge your batteries before storing them.

B. Store the batteries in a clean, dry area.

8.7 Battery Disposal



WARNING

Batteries that reach the maximize life cycles or corroded batteries are hazardous waste.

Contact your local recycling center for disposal of the batteries.

POWER CHAIR MAINTENANCE

We designed this power chair hoping to provide you comfort and mobility throughout your daily activities for many years to come, regular maintenance will both increase the lifespan and maintain the performance of this power chair.

9.1 Cleaning



WARNING

Clean your power chair often, wipe off any dust or dirt especially on or around motors and wheels.

Never attempt to clean your power chair with oil or chemical liquids.

Never attempt to use a water hose to rinse the power chair, clean the surface with a damp cloth, then use a lint free cloth to wipe off any water marks.

Wash the seat and backrest cushions only if necessary, they can be hand washed or machine washed cold water and tumble dry low.

9.2 Routine Check



WARNING

Regularly check the power chair for any loose fasteners. use the Free maintenance tools that came with the chair to tighten all screws and bolts.

Regularly check the cables and connectors to see if they are tightly connected. Reconnect any cables and connectors if they are loose.

Periodically check the batteries for any signs of corrosion.

9.3 Storage



WARNING

Store your power chair in a clean and dry area.

Perform a thorough check before operating the power chair after storage.

TROUBLESHOOTING

10.1 Common Issues

These are the most common issues the operator may experience and ways to resolve them.

Chair powered ON, not moving when pushing the joystick, Controller keeps beeping.	Please check and ensure the chair is in the electric mode by pushing both levers on the motor to the backward position. Please refer to section 2.2, Step 6 in the Quick Start Guide.
Chair powerd ON, not moving when pushing joystick, Controller LED blinking.	You or someone else may have engaged the Electronic Lock accidentally. Please refer to section 2.7, how to set the Electronic Lock in the Quick Start Guide to unlock the chair.
Cannot pull the chair around while folded.	Please check and ensure the chair is Powered OFF and in the manual mode. Please refer to section 2.2, Step 6 in the Quick Start Guide.
Battery feels like its draining too fast.	Navigator series all comes with 2 lithium batteries that are connected in parallel, meaning only 1 is required to power the chair. Make sure both batteries are seated properly and the chair is not drawing power from only one battery.

10.2 Diagnostic System

The speed level indicator LED on the joystick also functions as a diagnostic indicator for your power chair. When the light stays solid at the selected speed level, the power chair is functioning correctly, and if it starts flickering, then there's an issue.

A. If it's the first time that the indicator is flickering, power off the power chair, pull out and reseat both batteries. Turn it on after a few seconds and recheck the diagnostic indicator. If it continues to flicker, then refer to the diagnostic chart for more information.

B. Make sure the chair is in the electric mode by flickering both of the switch levers on the motor to the backward position. (see section 2.2) Issues from motor, brake, battery, wire connection and other parts of the power chair can trigger the diagnostic indicator to flicker.

C. There will be a pause after the initial flickering, follow the flickering pattern to find out which part is causing the problem from the diagnostic chart.

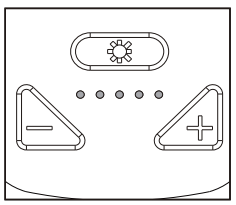

Observe the diagnostic indicator's LED position and flickering and check the Diagnostic Chart.

10.3 Diagnostic Chart

Please refer to section 3.3 felectrical diagram for component cabling guide.

 LED 1 Flicker	Hall malfunction of left motor	Check the cable connection of the left motor and the internal hall component.
 LED 2 Flicker	Hall malfunction of right motor	Check the cable connection of the right motor and the internal hall component.
 LED 3 Flicker	Battery voltage too low	Fully Charge Battery then check again, If problem persists, New Battery is needed.
 LED 4 Flicker	Malfunction of left motor gear	Turn off power, switch the chair to manual mode, push the chair manual to check for abnormal sounds coming from the left motor.
 LED 5 Flicker	Malfunction of right motor gear	Turn off power, switch the chair to manual mode, push the chair manual to check for abnormal sounds coming from the right motor.
 LED 1、5 Flicker	Malfunction of left brake	Check the cable connection to the left motor and the break component for potential open or short circuit.
 LED 2、5 Flicker	Malfunction of right brake	Check the cable connection to the right motor and the break component for potential open or short circuit.
 LED 3、5 Flicker	Malfunction of controller	Contact our technical support team for more assistance.
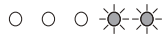 LED 4、5 Flicker	CPU Cable signal issue	Check all cable connections to the CPU and reconnect if nessassary.
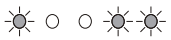 LED 1、4、5 Flicker	Controller Cable Signal issue	Check Controller cable connections and reconnect if nessassary.
 All LED Flicker	Joystick not centered	do not push the joystick in any direction before or while turning on the chair. If problem persists, joystick replacement is needed.

WARRANTY

Forcemech International LLC. offers a limited warranty to your Forcemech Navigator PRO and its parts against defects in materials and/or workmanship, contact us immediately if you notice there is an ongoing issue with your power chair.

1. Main frame – five years
2. Motors – two years
3. Controller Box(CPU) – one year
4. Batteries – one year
5. Joystick Controller – one year

There are exclusions to our limited warranty:

1. Damage to the power chair caused by exceeding the weight limit of 397lbs.
2. Damage to the power chair caused by accidents or natural disasters.
3. Damage to the power chair due to improper use and handling.
4. Modifying power chair with unauthorized installation of components not from Forcemech.
5. Consumables such as cushions, tires and bearings are not covered.
6. This warranty does not apply to routine maintenance and adjustments.
7. This warranty only applies to the original buyer, and is not transferable.

Contact Forcemech

For questions on how to operate the chair, warranty claims, purchasing parts or any other issues you may have related to the power chair, please contact us. We will be happy to assist you.

by phone: 1-877-90-FORCE
by email: support@forcemech.com

When contacting Forcemech, **please have one of the following ready** and we will be able to locate your order quickly to better assist you. **For warranty claims, it is required for us to verify your purchase**.

A. Serial Number (located on the back cover of this manual as well as on the chair at the inner side of the battery housing frame).

B. Original Receipt (whichever retailer/online platform you purchased our chair from).



No reproduction in any form of this manual, in whole or in part (except for brief quotation in critical aricles or reviews), may be made without written authorization from Forcemech International LLC.

FORCEMECH

INNOVATE MOBILITY FREEDOM

FORCEMECH SERIAL NUMBER & CERTIFICATE OF AUTHENTICATION

Navigator PRO

Forcemech International LLC.
PHONE: 877-903-6723 EMAIL: support@forcemech.com

©2025 Forcemech International LLC.