FORCEMECH

CARBOFLEXION™ 100% Carbon Fiber Monocoque Architecture

ULTRALITE G20



User Instructions Manual

With Quick Start Guide

www.forcemech.com support@forcemech.com

TABLE OF CONTENTS

1. Introduction 3

2. Quick Start Guide 4

2.1 Parts List 4

2.2 First Time Setup 5

2.3 Manual Operation Setup 8

2.4 Folding the Chair 9

2.5 Charging the Chair 11

2.6 Controller Operation 15

2.7 Operation Safety 18

3. Features of your power chair 19

3.1 Parts of your Ultralite G20 (View From Front) 19

3.2 Parts of your Ultralite G20 (View From Back) 20

3.3 Ultralite G20 Electrical Diagram 21

4. Specifications 22

5. General Safety Guidelines 24

5.1 Important Notice 24

5.2 Weight Limit 25

5.3 Sitting in the Power Chair while it's Stationary 25

5.4 Operating Environment 25

5.5 Operating Terrain 26

5.6 Operating on the Road 26

5.7 Motor Vehicle Safety 27

5.8 Operating Through Obstacles 28

5.9 Operating on Slopes, Ramps and Hills 28

5.10 Operating up and down the Stairs and Escalators 29

5.11 Operating on Power Chair Lifts 29

5.12 Operating on Curbs and Single Steps 30

5.13 Maintaining Balance while Operating 30

5.14 Getting on/off the Power Chair 31

5.15 Reaching or Leaning 31

5.16 Dressing while Sitting in the Power Chair 32

5.17 Reverse Driving 33

5.18 Lifting the Power Chair 33

TABLE OF CONTENTS

6. Component Safety Guidelines 34
- *6.1 Armrests* 34
- *6.2 Batteries* 34
- *6.3 Fasteners* 34
- *6.4 Footrests* 35
- *6.5 Controller* 35
- *6.6 Motor Brakes* 36
- *6.7 Power ON/OFF Button* 36
- *6.8 Seat and Backrest Cushion* 36

7. Electromagnetic Interference 37
- *7.1 What is Electromagnetic Interference?* 37
- *7.2 Sources of EMI* 37
- *7.3 Effects of EMI on Power Chair* 37
- *7.4 Resistance to EMI* 37
- *7.5 EMI Sources that are Relatively Safe* 38
- *7.6 Preventive Actions* 38
- *7.7 EMI Incidents Report* 38

8. Battery Maintenance 39
- *8.1 Charging the Batteries* 39
- *8.2 Maximizing the Life Cycles of the Batteries* 39
- *8.3 Battery Indicator & Over Discharge Protection* 40
- *8.4 Over Current Protection* 40
- *8.5 Cleaning the Batteries* 40
- *8.6 Battery Storage* 40
- *8.7 Battery Disposal* 40

9. Power Chair Maintenance 41
- *9.1 Cleaning* 41
- *9.2 Routine Check* 41
- *9.3 Storage* 41

10. Troubleshooting 42
- *10.1 Common Issues* 42
- *10.2 Diagnostic System* 42
- *10.3 Diagnostic Chart* 43

11. Warranty 44

INTRODUCTION

Thank You for Choosing the Forcemech Ultralite G20 Power Chair!

The Ultralite G20 represents the second generation of the Ultralite series, carefully developed to build upon the proven excellence of the original G10. Engineered around the advanced CARBOFLEXION™ 100% Carbon Fiber Monocoque Architecture, the G20 delivers exceptional strength, ultra-lightweight performance, and a refined left-and-right folding design that enables effortless transport and storage. Upgraded ergonomics enhance overall seating comfort and body support, while controlled structural flexibility allows the frame to naturally adapt to the user's body contour—providing improved stability, balance, and confidence in everyday mobility.

The Ultralite G20 is equipped with the upgraded ForceMax™ battery system, delivering improved efficiency and more consistent power output for extended daily use. It also features an enhanced controller with a clear LED information display for intuitive system monitoring, along with an integrated USB-C charging port that allows users to conveniently power personal devices while on the go. Together, these refinements elevate the Ultralite G20 into a well-balanced power chair that delivers dependable performance, modern convenience, and the lightweight portability that defines the Ultralite series.

Before operating this power chair for the very first time, please read and follow all instructions in this manual carefully. To avoid personal injuries and/or damage to the power chair, it is very important for you to have a comprehensive knowledge of the features of this power chair. If you have any trouble understanding the instructions of this manual or require further assistance for setting up, operating, and the maintenance of this power chair, please contact us immediately.



This manual serves as the ultimate guideline for you, your assistant, or caretaker who's helping you with operating this power chair. Read this manual carefully and review it often until you are certain how to handle every procedure of operating this power chair. Forcemech and its affiliates cannot be held responsible for personal injuries or property damage caused by improper handling of the Forcemech power chair.

Your opinions are very important to us – if you have any comments on the functionality and safety of this power chair, or the contents of this manual, please feel free to call us at 1-877-90-FORCE
or email us at support@forcemech.com

A × 1

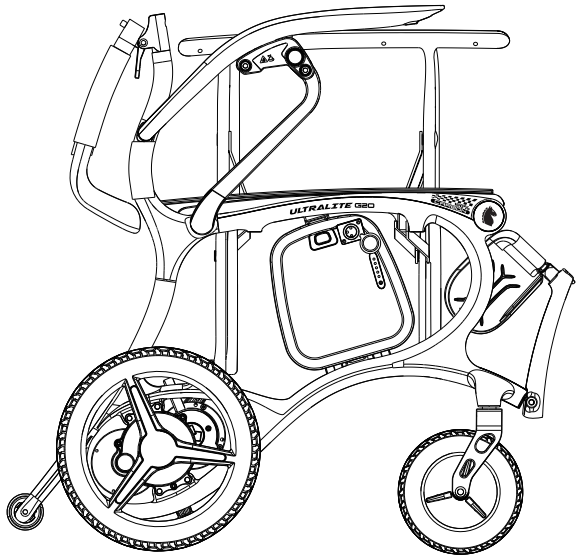

Forcemech Power Chair

B × 1

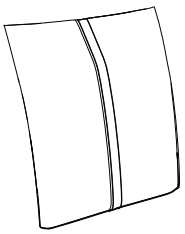

Back Rest Cushion

C × 1



Seat Cushion

D × 1

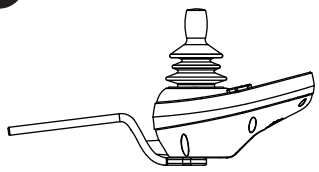

Controller

1 × 1

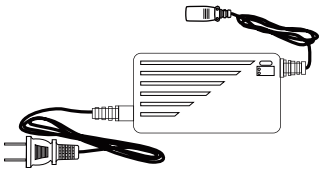

Battery Charger

2 × 1

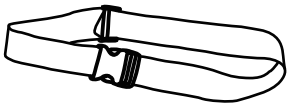

Seat Belt

STEP 1

Grasp the top frame of the chair and pull the frame outward to unfold the chair.

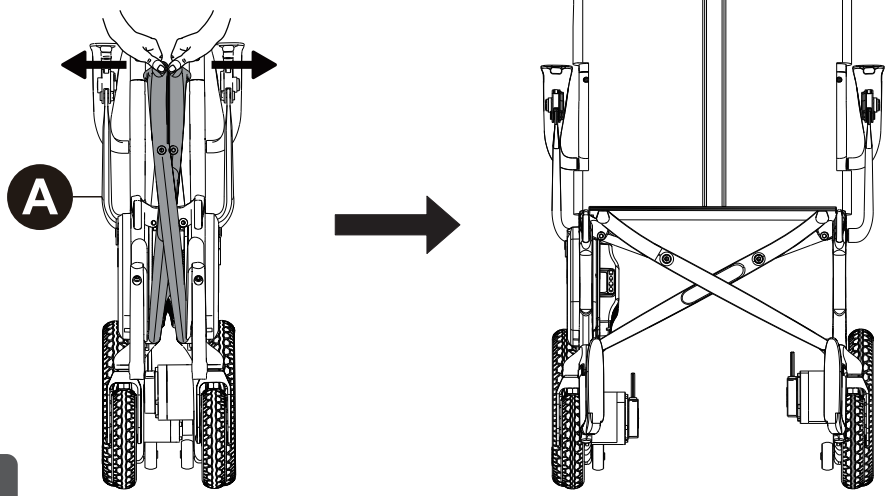

STEP 2

Lift the backrest handle upward from the lowered position until it is fully raised and secured.

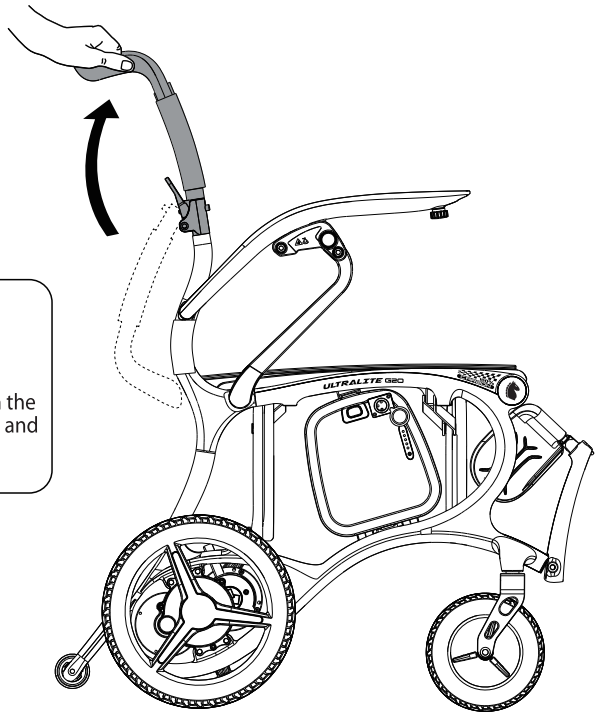

STEP 3

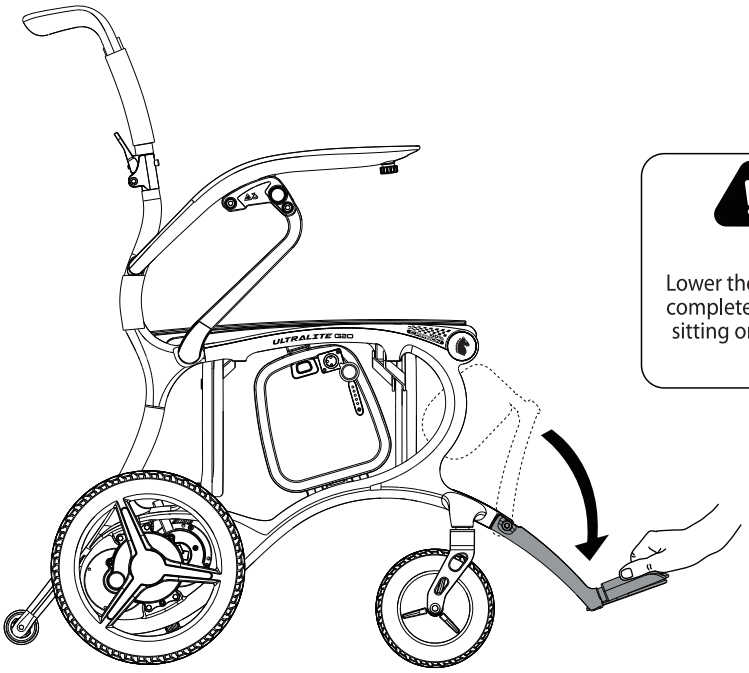

Lower the footrest completely before sitting or driving.

STEP 4

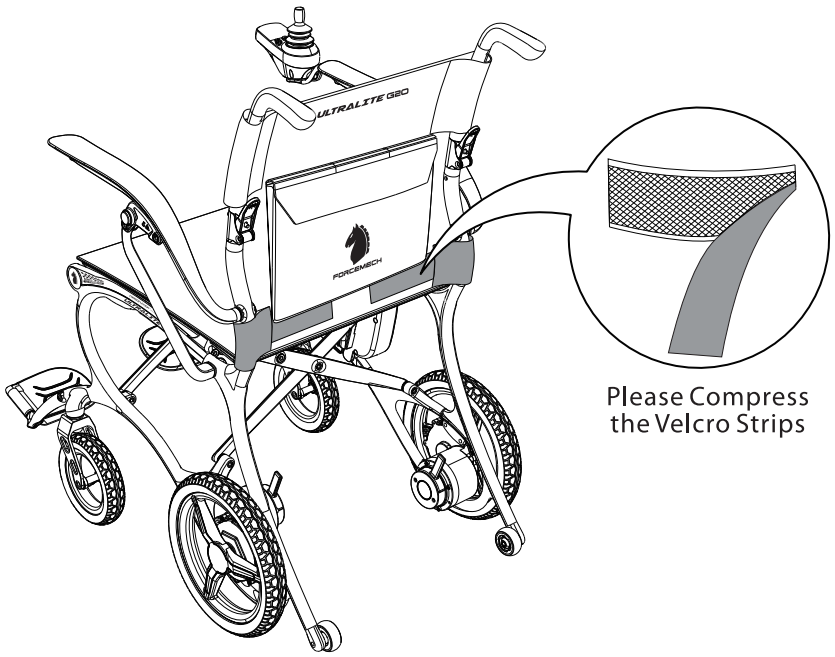

Please Compress the Velcro Strips

The seat cushion and backrest may be pre-installed. Use the hook-and-loop strap on the back of the backrest to secure the controller cable to the frame and prevent snagging or tangling.

STEP 5

Seat cushion may be slightly deformed out of the box; this is normal and it will return to shape within a couple of days. Align the hook-and-loop fastener, then fold the front edge under the seat and press firmly to secure.

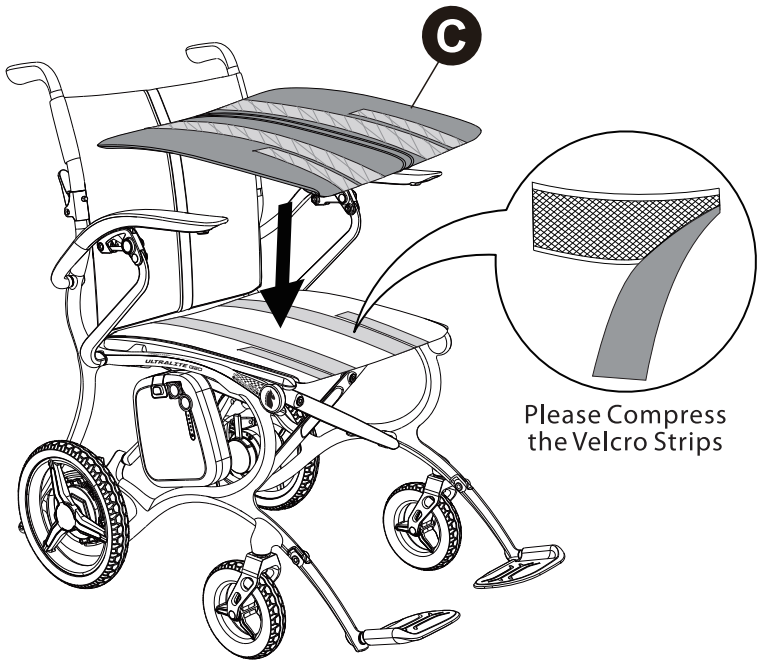

STEP 6

The Controller can be attached to either side of the armrest, cable from the CPU end may need to be rerouted if attaching to the left armrest.

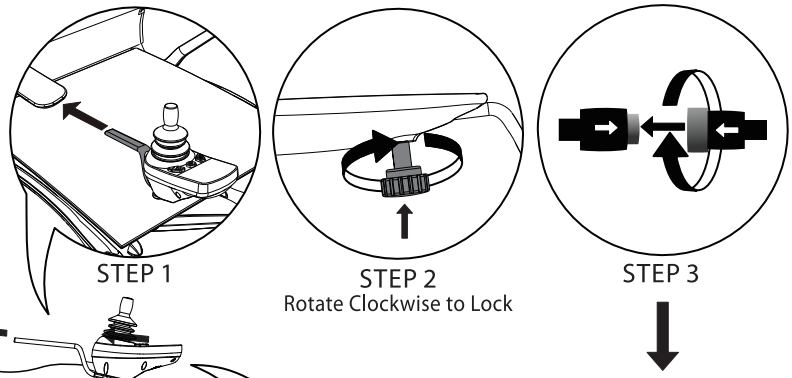

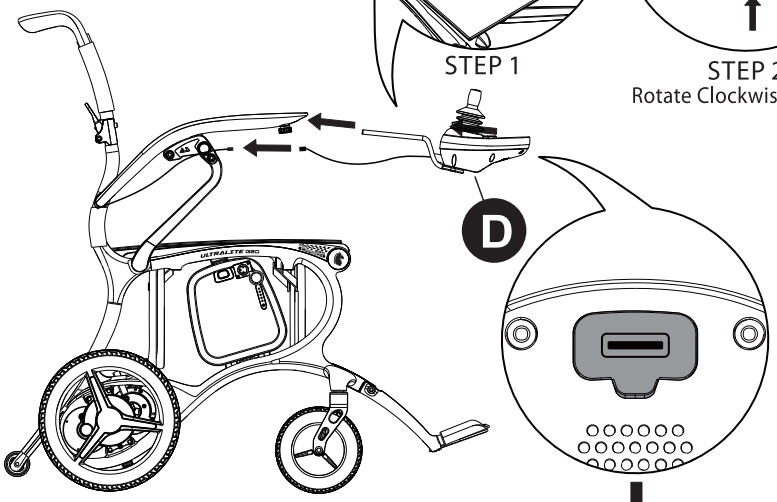

CONNECTED:
Connect by joining the Arrow pointing at each other.

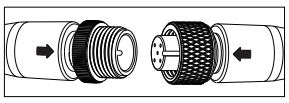

Type-C Port Feature
The built-in Type-C port enables convenient charging of your mobile phone while the wheelchair is powered on.

STEP 7

The chair's Armrest can be unlocked and raised up to adjust the resting position, or raised all the way up to moving the chair close to a table.

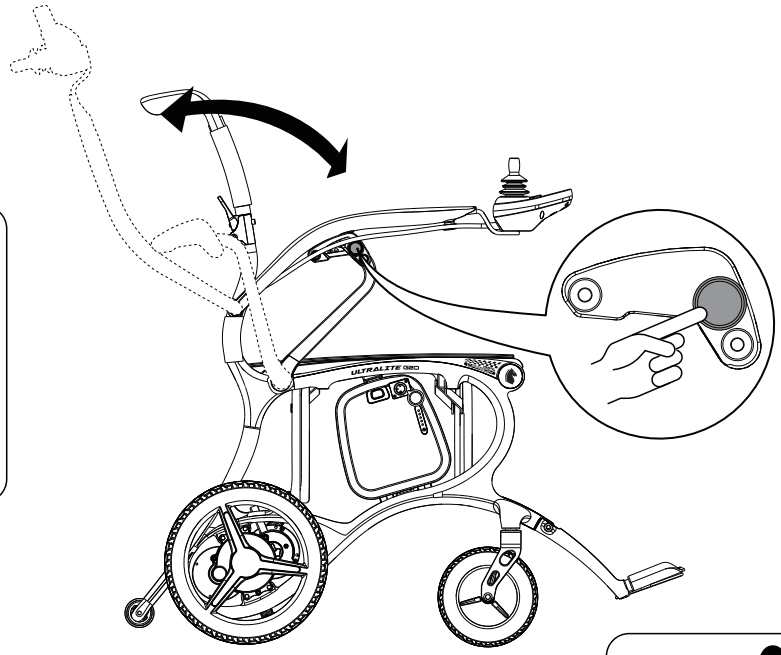

STEP 8

Chair will only be operable with the Controller in Electric Mode.

Manual Mode disengages motor from battery and bring the chair into the Free-Wheel state for caretaker to push the chair from behind.

Manual Mode should be engaged for Dragging the Chair while folded in upright position.

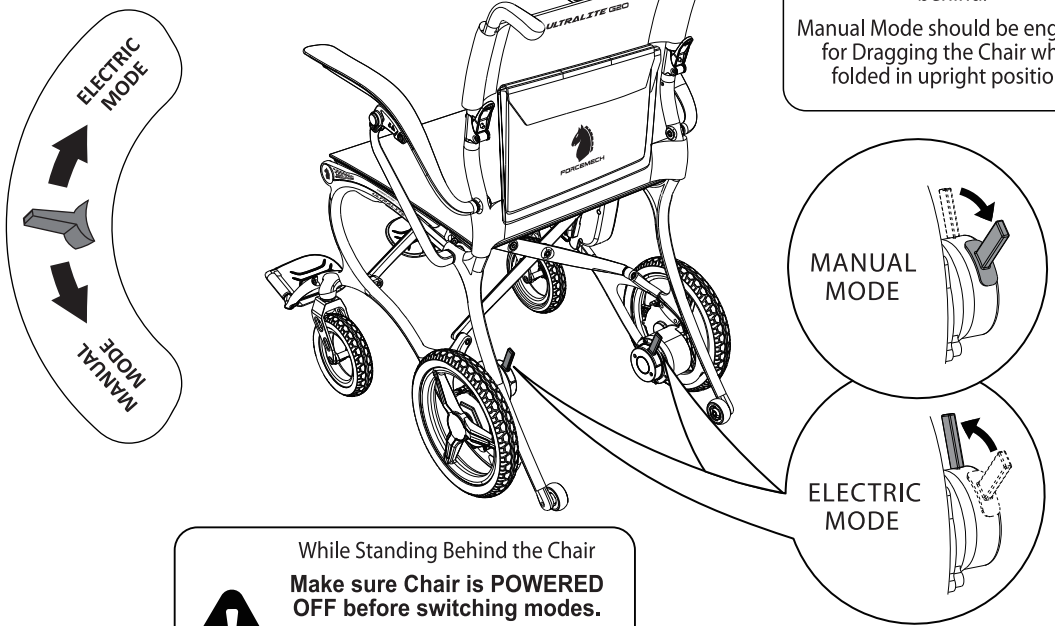

While Standing Behind the Chair

Make sure Chair is POWERED OFF before switching modes.

BOTH Levers need to be pushed **Forward** to Engage **Electric Mode.**

BOTH Levers need to be pushed **Backward** to Engage **Manual Mode.**

STEP 9

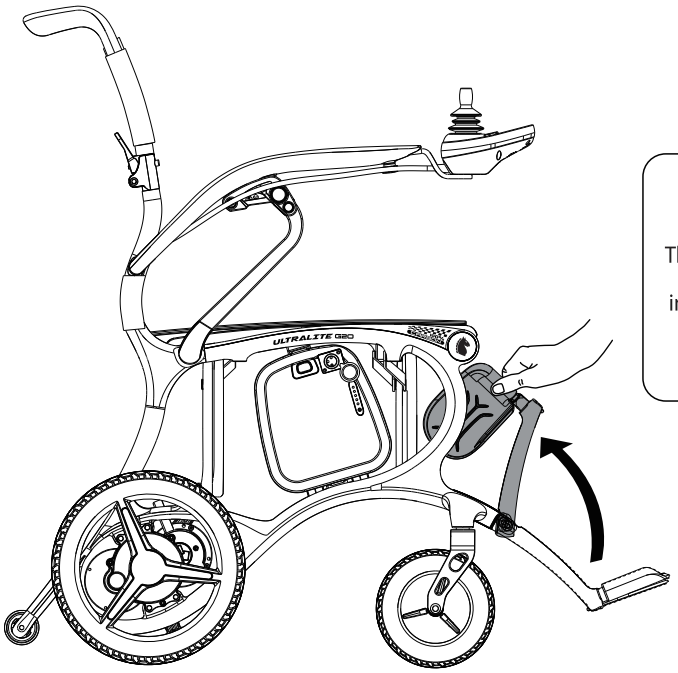

The footrest can be lifted and folded inward toward the frame without removal.

STEP 10

With both hands, grasp the front and rear edges of the seat cushion (C). Lift the seat cushion straight up as shown.

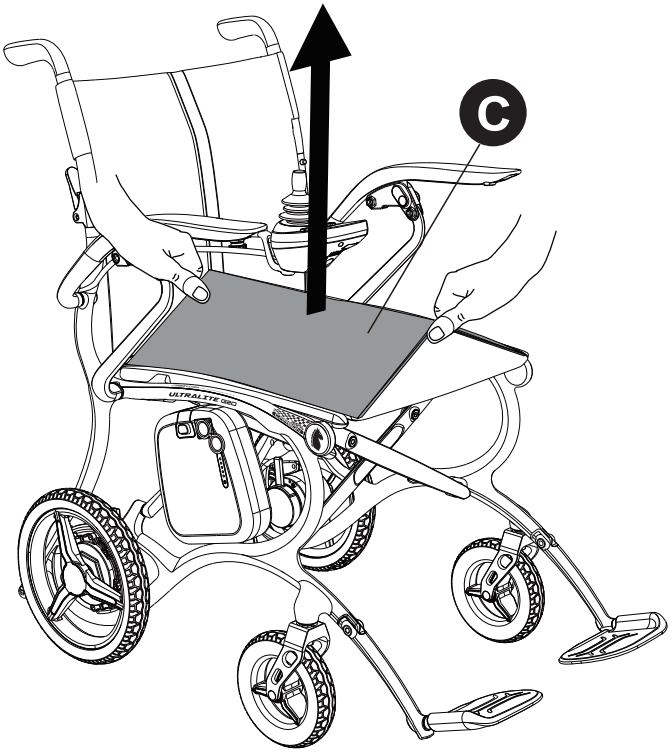

STEP 11

After lifting the seat cushion and bringing the frame inward, press the seat cushion down into place. Then use both hands to fold the armrests inward until the wheelchair is fully folded.

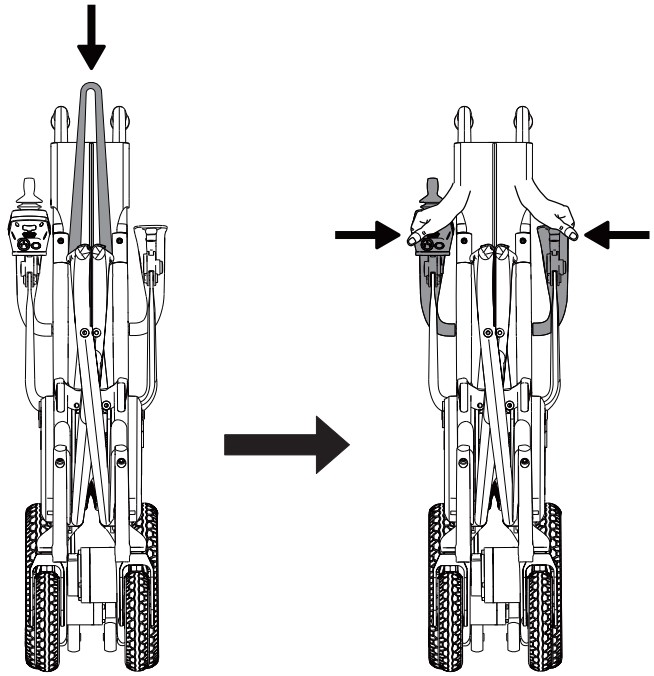

STEP 12

There is a release latch on each side at the back of the backrest. Press both latches and fold the backrest handle downward.

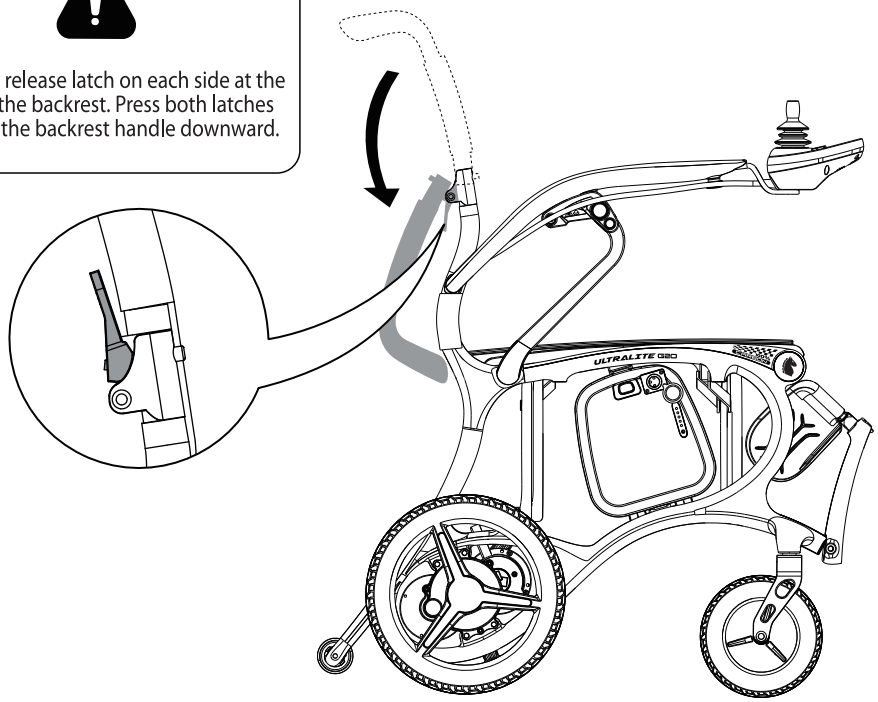

Make sure the chair is POWERED OFF before charging.

Charge the Battery by connecting the Charger to the **Main Power Charging Port** located under the Controller. Make sure the charger's male end is aligned with the female end on the controller.

ONLY Charge through the Auxiliary Charging Port on the battery while the battery is pulled out of the chair. This function is for situations where the chair cannot be brought close to a wall plug.

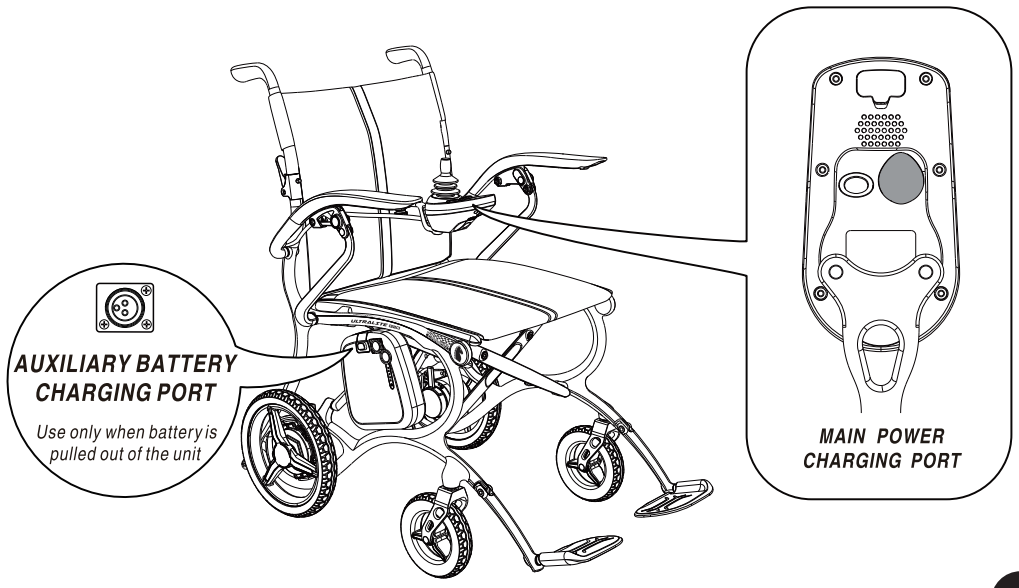

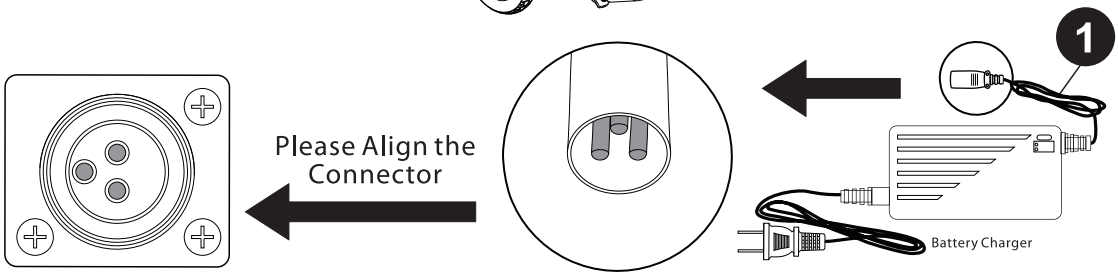

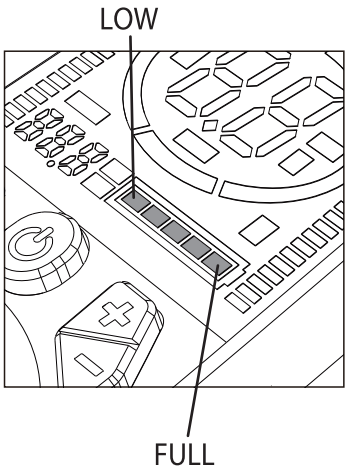

The LED battery level indicator located at the tip of the controller, next to the power on/off button indicates the remaining power of the whole chair. Check by simply turning on the chair.

The LED battery level indicator located on the right side of the front of the battery indicates the remaining power of the current battery. Check by pressing and holding the button next to the LED lights.

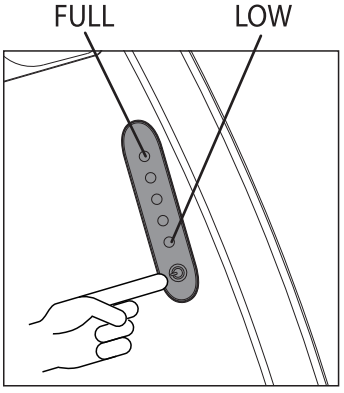

Battery Level

The controller battery gauge shows the remaining battery charge.

1. When the far-right battery segment on the LCD is full, the battery is fully charged.
2. When only the last one or two segments are lit in red, the battery level is low and charging is required.
3. Before long-distance travel, it is best to start with a full charge.
4. If the battery icon flashes, the battery level is critically low—please charge as soon as possible.
5. Red segments indicate low battery level, while white segments indicate available remaining charge.

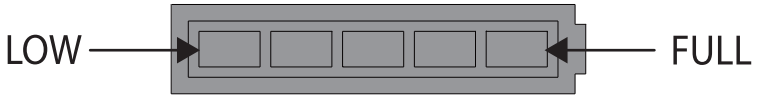

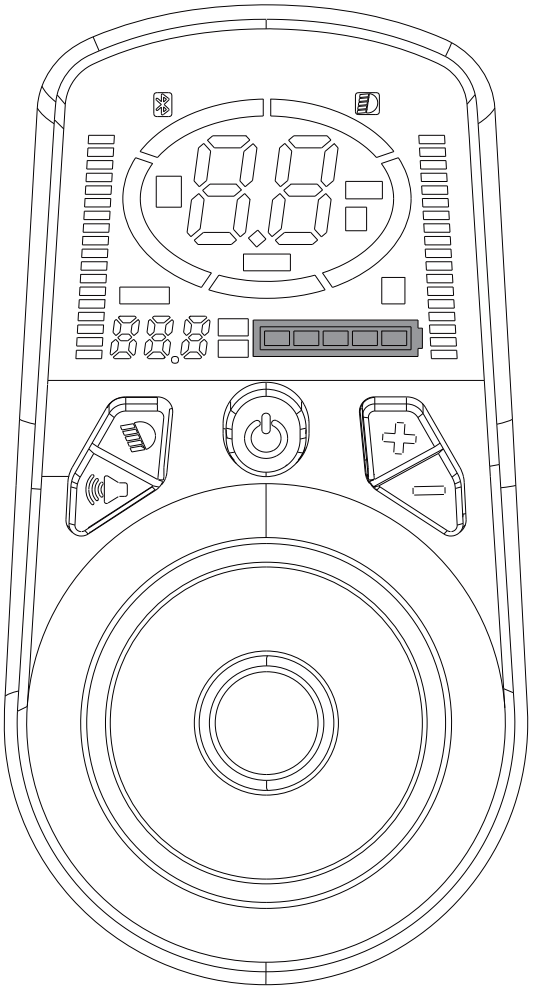

Battery Charging Method

Insert the charging plug (Fig. 1) into the controller charging port (Fig. 2) as shown.

Pin 1: Positive (24V DC) **Pins 2 & 3: Negative (24V DC)**

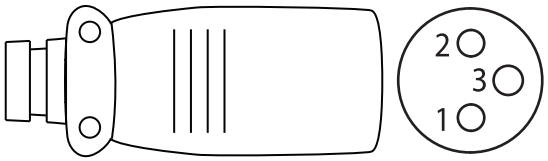

Fig. 1: Charging plug

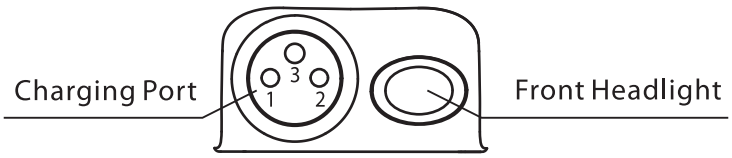

Fig. 2: Controller charging port

Warnings

The charging status is displayed only when the charger is plugged into the controller. After unplugging the charger, the charging status will not display. Whether the battery is fully charged is determined by the charger indicator. During charging, do not disconnect the battery connection.

The battery can also be charged while the controller is OFF. Whether the battery is fully charged is determined by the charger indicator.

Before charging, confirm the polarity of the charger plug pins and ensure it matches the pin polarity shown on the controller charging socket. If the pins are not compatible, it may cause injury or fire.

Using an incorrect charger may damage the battery, wheelchair, control system, or charger, and may cause components to overheat, creating a potential risk of injury or fire.

To installs the battery pack, engage the lower tab into the lower slot first, then pivot the top inward and press firmly until you hear a click and the battery is fully locked. If the battery is not locked in place, the chair will not

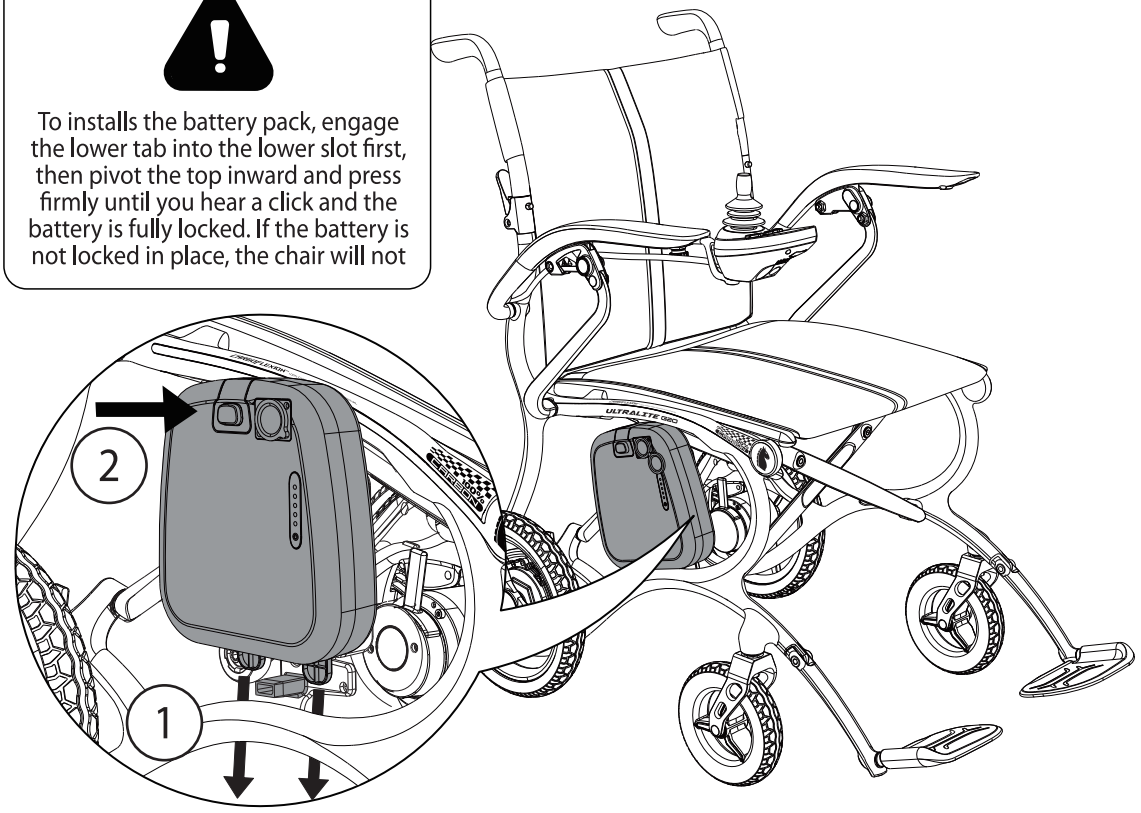

Enhanced Battery Flexibility: Designed with backward compatibility in mind, the Ultralite G10 battery can be used on the Ultralite G20, providing a smooth transition when moving from the previous Ultralite G10 model.

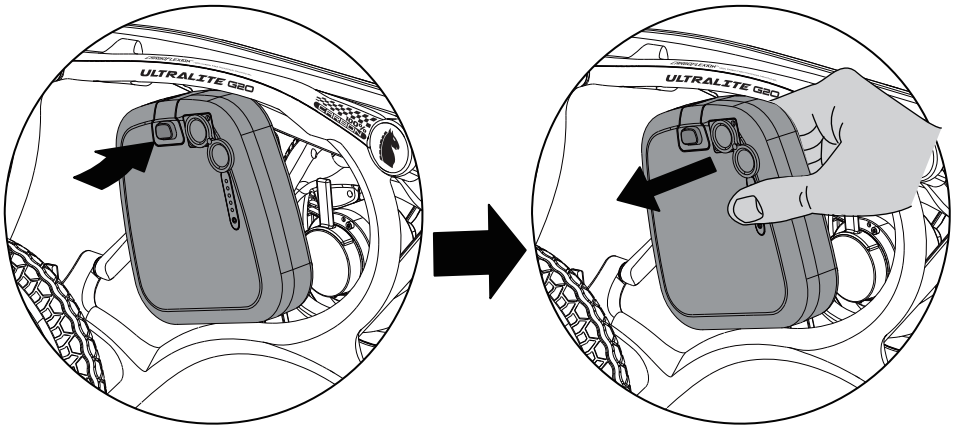

Press and hold the release button, then pull the battery pack straight out.

The Controller Diagram

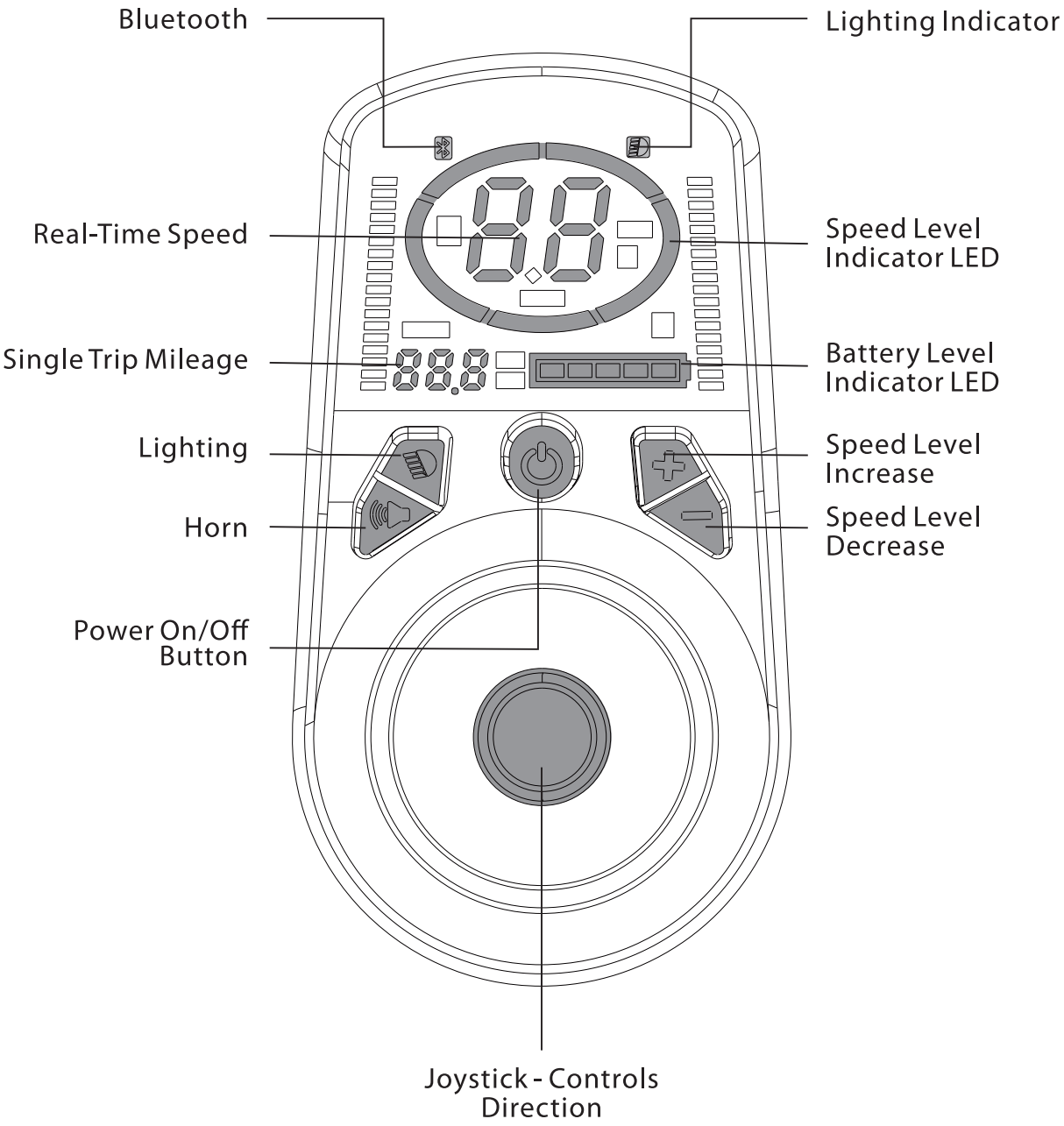

Forcemech Ultralite G20 comes with the electronic lock for users to be able to lock-down the chair while unattended for added security measure.

How to Set Electronic Anti-Theft Lock

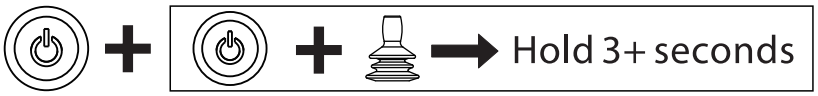

LOCK

With the controller powered on, press and hold the Power button for more than 3 seconds. Then push the joystick forward once and pull it back once. You will hear two beeps, followed by continuous beeps to confirm the lock. When locked, only the Power button remains active—all other buttons and joystick functions are disabled, and the chair will not drive. After 10 beeps, the controller will power off automatically. When you power on again, the chair remains locked.

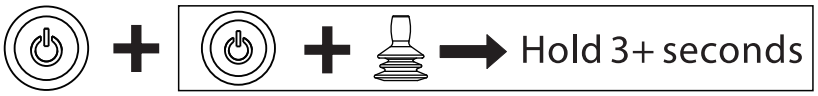

UNLOCK

With the controller powered on, press and hold the Power button for more than 3 seconds, then push the joystick forward once and pull it back once. A single beep indicates the chair has been unlocked. Once unlocked, all buttons operate normally, and you can drive the chair using the

How to enable Silent Mode



OFF

With the controller powered on, press and hold the Speed Up button for more than 3 seconds. When the controller emits one beep, all button tones and voice prompts will be turned off (excluding the mechanical horn sound).

How to switch units (km/mi)

KM/MI

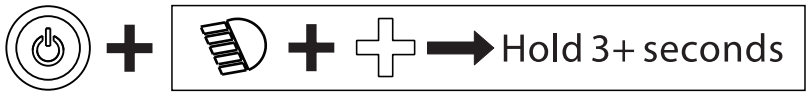

With the controller powered on, press and hold the Headlight button and the Speed Up button at the same time for more than 3 seconds. When the controller emits one beep, the unit will switch between kilometers (km) and miles (mi).

How to Turn On/Off the Reverse Beep

On/Off

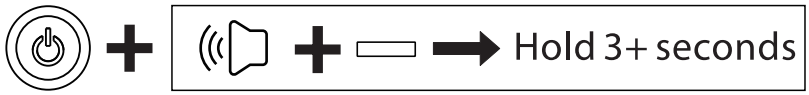

With the controller powered on, press and hold the Horn button and the Deceleration (–) button for more than 3 seconds. When you hear one beep, power the unit off for the setting to take effect.

How to Turn Voice Announcements On/Off

On/Off

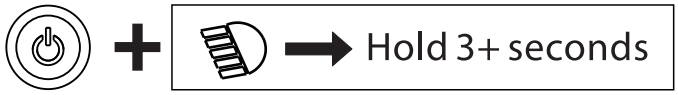

With the controller powered on, press and hold the headlight button for more than 3 seconds. When you hear a beep, the system will switch between English voice announcements and voice-off (silent) mode.

Safety of Operation is very important to reduce the risk of potential accident that may cause harm to the operator and damage the chair.

Make sure that Seat Belt is worn at ALL TIMES while operating the chair.

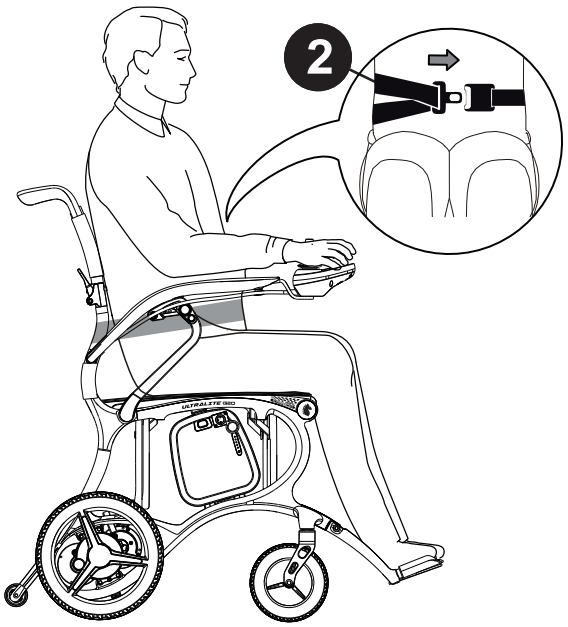

The chair is designed to handle maximum slope of 12 Degrees. Make sure to **avoid driving over slippery surface and any bumps or protruding objects** while going up or down any slopes.

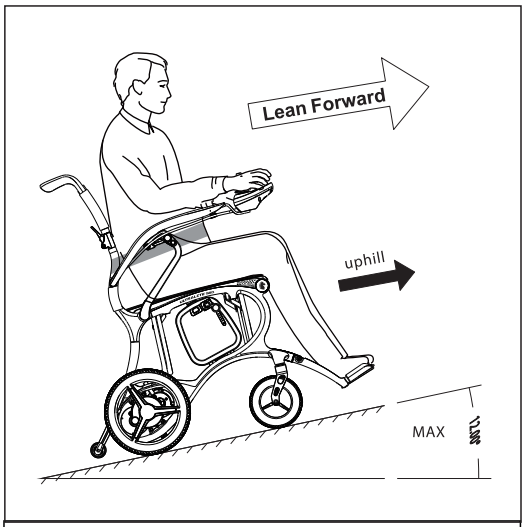

When going uphill, it is recommended to lean forward, which puts your center of gravity towards the front of the chair, this will reduce the risk of tipping.

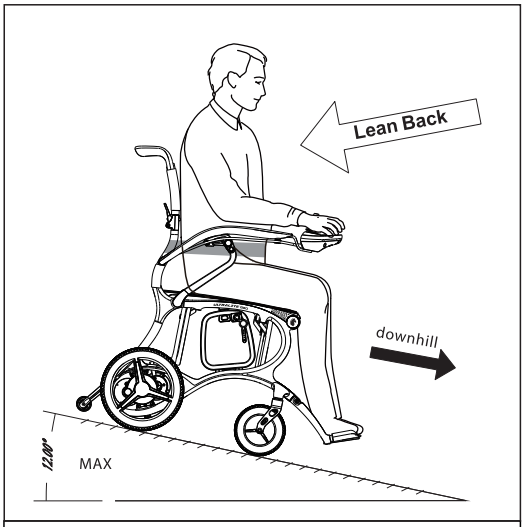

When going downhill, it is recommended to lean back, which puts your center of gravity towards the rear of the chair, this will reduce the risk of tipping.

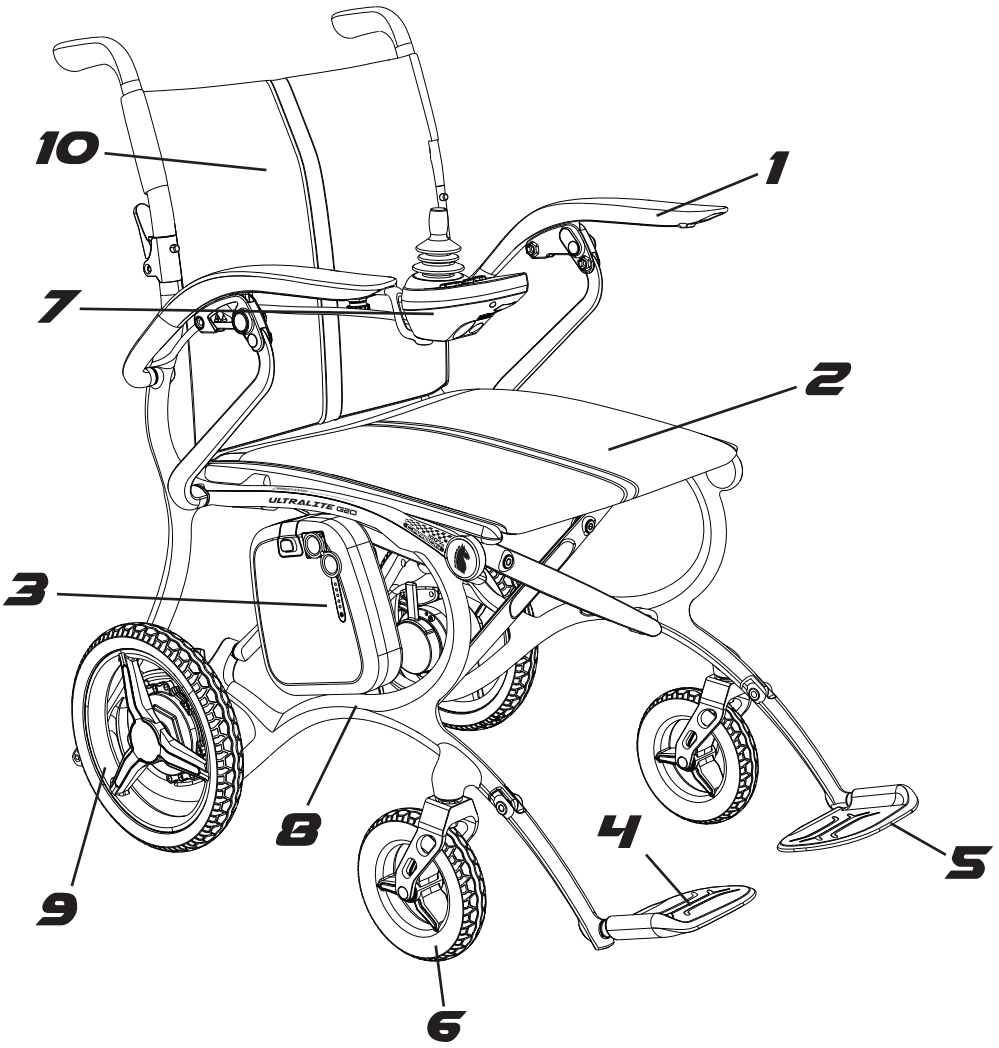

3.1 Parts of Your Ultralite G20 (View From Front)

1. Armrest
2. Seat Cushion
3. Battery
4. Footrest
5. Footrest Folding Handle
6. Front Wheel
7. Controller
8. Main Frame
9. Drive Wheel
10. Backrest Cushion

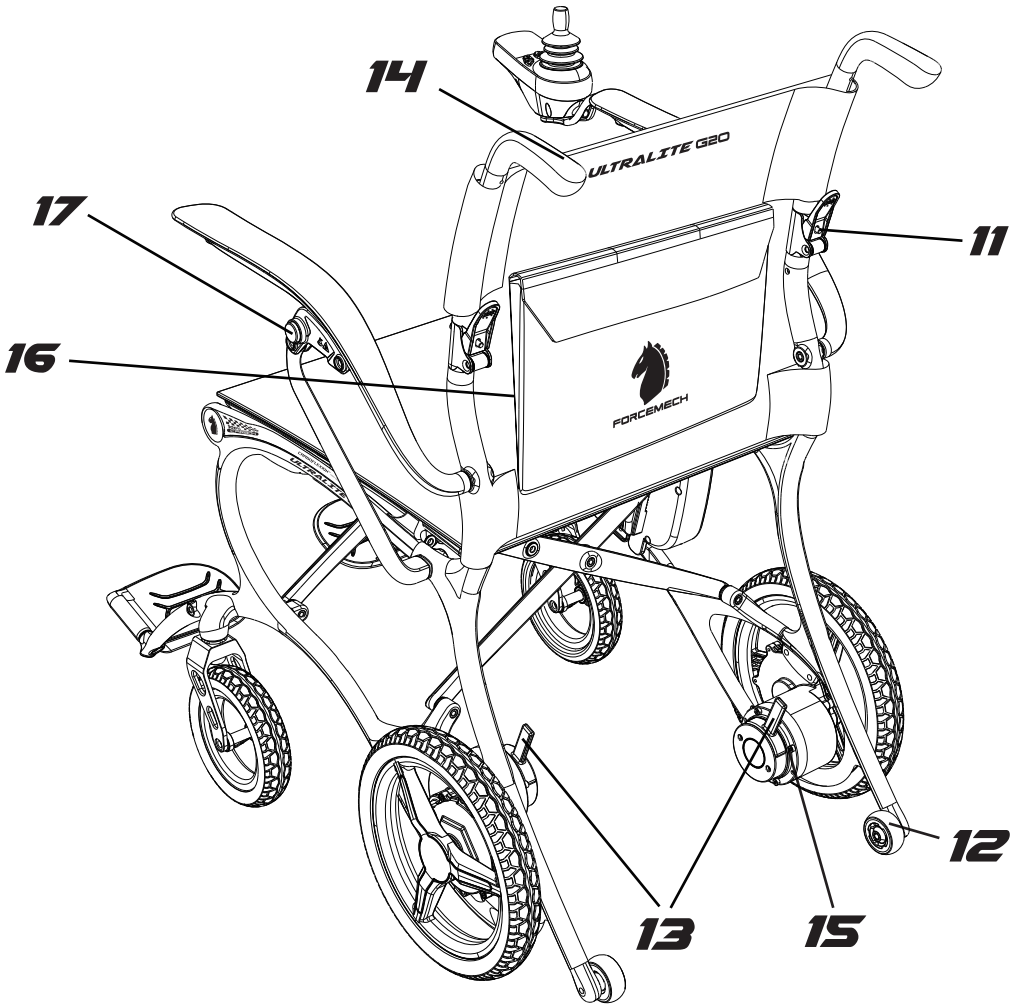

3.2 Parts of Your Ultralite G20 (View From Back)

11. Backrest Folding Latch
12. Anti Tipping Wheels
13. Electric/Manual Mode Switch Lever
14. Backrest Handle
15. Electric Motors
16. Storage Pouch
17. Armrest Folding Button

3.3 Ultralite G20 PRO Electrical Diagram

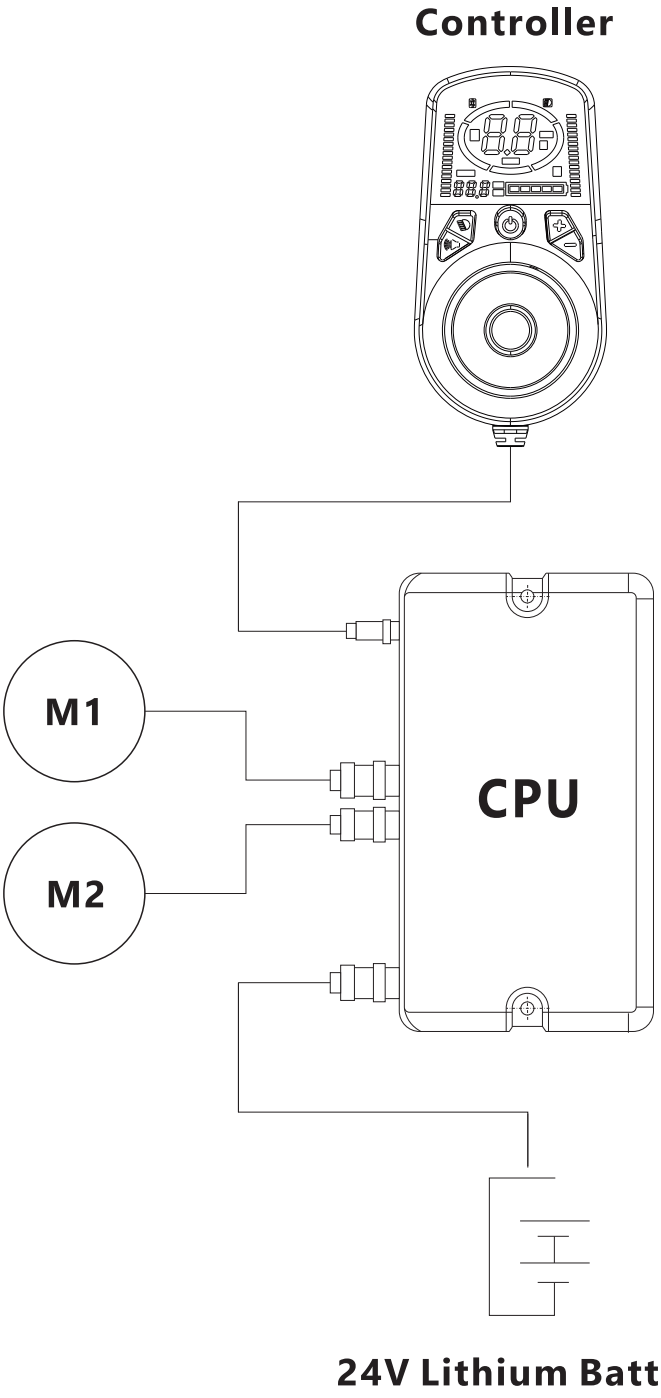

SPECIFICATIONS

Overall dimensions(L*W*H)	36" x 24" x 36"
Folded dimensions(L*W*H)	29" x 10" x 28"
Total weight (without battery)	25 lbs
Battery weight	3 lbs
Mass of the heaviest part	2.8 lbs
Pivot width	43"
Reversing width	59"
Turning radius	28"
Ground clearance	1.25"
Required width of angled corridor	39"
Required doorway entry depth	53"
Required corridor width for side opening	35"
Static stability	9°
Driving distance	12 miles
Dynamic stability uphill	6°
Climbing ability	3°
Maximum Climbing Degree	12°
Max over the obstacle height	±1"
Maximum speed forward	≤4.5 mph
Minimum braking distance from max speed	≤39"
Seat plane angle	4°
Effective seat depth	17.5"
Seat width	18"
Effective seat width	20"
Seat surface height at front edge	18.5"
Backrest angle	12°
Backrest height	17"
Back support height/Backrest height	17"
Distance from Footrest to Seat	15.3"
Distance from Footrest to Surface	3"
Footrest length	4.5"
Footrest to leg angle	97°
Leg to seat surface angle	114°
Armrest height	9.5"
Front location of armrest structure	14"
Armrest Length	15"

SPECIFICATIONS

Armrest Width	2"
Armrest Angle	2.5°
Audible noise	≤65 dB(A-weighted)
The forces necessary to operate the control devices	Push-button2N Rocker≤5N
Motor Power	250W
Lithium Battery Specification	24V 12.5Ah
Maximum Output Current of Controller	35 A
Maximum Output Current of Charger	2 A
Diameter of movable wheels/Castor wheel diameter	6.5"
Diameter of fixed wheels/Propelling wheel diameter	11"
Linear Tolerance	±2"
Angular Tolerance	±2°
Mass Tolerance	±4.4 lbs

Note:

1. The weight capacity is tested with a dummy or personnel of same weight.
2. Maximum potential range is tested on flat road with average speed, it will vary due to drive surface, operation habit, etc.

Attention! The Driving distance will be reduced if the wheelchair is used frequently on slopes, rough ground or to climb kerbs, etc.

GENERAL SAFETY GUIDELINES

5.1 Important Notice

To User:



WARNING

Before operating your power chair for the first time, read over all the instructions on this manual carefully.
Before operating your power chair for the first time, take the time to become accustomed with the power chair until everything feels comfortable.
If you are operating the power chair with the help of an assistant, make sure the individual has also been thoroughly trained.
It takes time to get used to operating this power chair, have someone help you to perform actions such as leaning, stretching, reaching and dressing until you feel comfortable doing them on your own.
Do not attempt new maneuvers unless you know it is safe to do so.
Be aware of your surroundings and stay out of hazardous places.
While driving with maximum speed, do not attempt to make sharp turns.
Always wear your seat belt when operating the wheelchair.

To Attendant:



WARNING

Before assisting the power chair user for the first time, read over all the instructions on this manual carefully.
The power chair user's safety depends on you, help the user to develop safe habits of operating this power chair.
Do not attempt to sit or stand on this power chair while assisting its user.
Before pushing, make sure you switch the power chair to its manual/free wheel mode by turning off the electromagnetic brakes with the brake release lever.
Push the power chair by only using the push handle in the back of the power chair.
While pushing the power chair, do not attempt to make sharp turns.

5.2 Weight Limit

WARNING

The maximum load capacity of your power chair is 300 lbs, the user plus all items carried should not exceed this load capacity.

Do not allow additional user to sit or stand on the power chair.

When you are weight lifting while sitting on the power chair, make sure the total weight of yourself and the weights does not exceed 300 lbs.

Exceeding the weight limit will most likely damage the structure of the power chair and possibly cause injuries to its user.

Damage to the power chair caused by exceeding the weight limit voids the warranty.

5.3 Sitting in the Power Chair while it's Stationary

WARNING

Make sure you turn off the power of your power chair when it is parked, even for a short period of time to prevent power chair movement due to release of brake from EMI sources and/or accidental contact with the joystick.

5.4 Operating Environment

Motors, batteries and other power chair parts are not waterproof designed, contact with water or excessive moisture can corrode these parts as well as cause an electrical circuit failure. In order to avoid damaging the power chair, you should avoid the following operations:

WARNING

Avoid operating the power chair during heavy rainfall.

Avoid operating the power chair in snow or icy conditions.

Do not operate the power chair in the bath, sauna and swimming pool.

Avoid operating the power chair when you are nearing a water source (including rivers, lakes and oceans).

Make sure the battery cover is closed at all times.

Make sure all the electrical connections are safely secured.

Dry the power chair immediately if it gets hit by water.

Make sure the batteries are kept dry at all times.

5.5 Operating Terrain

WARNING

Your power chair is suitable for driving on concrete, asphalt and indoor floor surfaces.
Avoid driving in sandy, dirt-covered or rugged terrain, operating in such terrain can cause damage to the wheels, bearings, shaft or motors, as well as loose fasteners may occur.

WARNING

Never attempt to drive onto any slope or ramp greater than 12 degrees rise or drop.
Never attempt to operate on a slope or ramp if there is snow, ice, water or oil on it.
Never attempt to drive over any bump, rocks or any protruding objects as this will result in tipping over of the chair and cause harm to the operator and damage to the chair.
If you notice your power chair is losing traction, stop operating the power chair immediately. Turn off the chair and call caretaker for assistance.
Operate only if you are sure it is safe to do so, if you are stuck in a wet environment, seek help immediately.

5.6 Operating on the Road

WARNING

In most states, operating power chair on public roads is illegal, please consult your local department of transportation for instructions to operate your power chair in the public.

WARNING

Never attempt to operate your power chair on any roadways that prohibits the use of motor vehicles.
If you are operating in the public, be aware to the danger of motor vehicles on the roads and in parking lots.
If you are operating at night, it is recommended that you wear reflective clothing.

WARNING

Motor vehicle drivers may not notice you. While operating your power chair in the public, always make eye contacts with driver of the incoming vehicle before you go. If there's any doubt, yield until it is safe to operate.

5.7 Motor Vehicle Safety

As of today, the U.S. Department of Transportation has not approved any tie down system of transporting a power chair on a motor vehicle.

WARNING

Never sit on your power chair when you are on a moving motor vehicle. Any accident or immediate stop may throw you off the power chair.

Make sure you fasten your seat belt while sitting on a moving motor vehicle.

Always secure your power chair so it does not shift or roll on the motor vehicle.

Never transport this power chair in the front seat of a motor vehicle, it may shift and interfere with the driver.

5.8 Operating Through Obstacles

You will have to overcome some obstacles during your daily use of your power chair, these include but are not limited to ramps, door thresholds, lifts, potholes and broken pavements.

WARNING

If you attempt to operate your power chair through obstacles, a change of height may stop the wheels, therefore causing a fall, tip-over or loss of control, potentially injure its user and damage the power chair.

While operating your power chair, beware of obstacles and avoid them as much as possible in the area that you are driving on.

You may have to install ramps at entries of exit doors as well as remove or cover threshold strips between rooms.

To better maintain your center of balance while operating through obstacles:

- Lean your body forward slightly as you move up and over an obstacle.
- Lean your body backward slightly as you move downward through an obstacle.

5.9 Operating on Slopes, Ramps and Hills

While operating on a slope, ramp or hilly terrain, the center of balance of yourself as well as your power chair changes.

WARNING

Operate only if you are sure it is safe to do so, have someone to help you when you are operating on a slope, ramp or hilly terrain.

Never attempt to operate on any terrain that has a slope steeper than 12 degrees.

Never attempt to operate on a slope or ramp if there is snow, ice, water or oil on it.

Avoid operating on a slope or ramp that has uneven surfaces or a change in the slope grade.

Be aware of slope that has a drop off at the bottom, a drop off as small as 3/4th of an inch can stop the front wheel and cause the power chair to tip forward.

Always go straight up and straight down while operating on a slope or ramp.

Make sure the slope or ramp is wide enough to operate, and always stay in the center while operating.

Maintain a slow, steady speed while operating on a slope or ramp, avoid sudden change of speed.

While going down a slope or ramp, if the power chair is descending too fast, center the joystick to slow it down.

Never attempt to cut corner, turn or change direction on a slope or ramp.

While operating on ramps at home and work, there are several things to look out for.

WARNING

Ramps should be built by licensed contractors and meet all safety requirements.
Slope of the ramps should not exceed 12 degrees.
Ramps should not have any uneven surface or obstacle.
Ramps should not have any drop-off at the bottom, a drop-off as small as 3/4th of an inch can stop the front wheel and cause the power chair to tip forward.
Ramps that have open sides should be built with side rails to prevent your power chair from falling off the edge.
Ramps should be sturdy, can withstand the total weight of the user, power chair, the assistant and additional carriage.

5.10 Operating up and down the Stairs and Escalators

WARNING

Even with an assistant, never attempt to operate your power chair up and down the stairs or an escalator. Doing so may cause a fall over, resulting in serious injuries and/or damage to the power chair.

5.11 Operating on Power Chair Lifts

There are power chair lifts in transportation vehicles and buildings to help you to move from one level to another.

WARNING

If possible, have an assistant with you while using a power chair lift.
Make sure the power of the power chair is turned off. If you accidentally touch the joystick while the power is on, the power chair can possibly drive off the power chair lift, resulting in serious injuries and/or damage to the power chair.
Be aware of a power chair lift that has a drop off at the bottom, a drop off as small as 3/4th of an inch can stop the front wheel and cause the power chair to tip forward.

5.12 Operating on Curbs and Single Steps

WARNING

While operating on curbs and single steps, it is recommended to use a ramp as your power chair is not designed to operate on curbs and single steps that are more than 3/4th of an inch.

If you must operate on curbs and single steps that are steeper than 3/4th of an inch, have someone assist you with the process.

If you must operate on curbs and single steps that are steeper than 3/4th of an inch alone, drive straight up and down as much as possible at a slow, steady speed.

While operating on curbs and single steps, never attempt making turns.

5.13 Maintaining Balance while Operating

Maintaining balance while operating your power chair is extremely important, and your center of balance is affected by:

A. A change in your body position and posture.

B. A change in the distribution of weight on the power chair, such as adding or taking off carriage.

C. Adjusting seat height and angle.

D. Operating on ramp, slope, curb and single steps.

E. Modifying your power chair by adding components or changing parts.

WARNING

Always maintain the battery is plugged into the chair.

Losing center of balance while operating your wheel chair can result in falling or tipping over, to avoid this, reduce speed and operate at a steady speed when a change of balance occurs.

5.14 Getting on/off the Power Chair

WARNING

Getting on and off the power chair affects the center of balance of both you and your power chair. With improper techniques, falling or tipping over can occur, resulting in injuries and/or damage to the power chair.

WARNING

Make sure the power is turned off while you are getting on and off the power chair. If you accidentally touch the joystick while the power is on, the power chair can start moving during the getting on and off process.

Make sure you have enough space to maneuver while getting on and off the power chair.

Rotate the front wheels sideways while the power chair is stationary, this will give the power chair a better grip of the surface it's parked on.

Never attempt to stand on the footrests while getting on and off the power chair.

Be aware of the position of the footrests, it is possible to trip over it while getting on and off the power chair, fold it up if you have to.

Fold the armrest upward if you need more space while getting on and off the power chair.

5.15 Reaching or Leaning

WARNING

Reaching or leaning affects the center of balance of both you and your power chair. With improper techniques, falling or tipping over can occur, resulting in injuries and/or damage to the power chair.

WARNING

Make sure the power is turned off while you are reaching or leaning. If you accidentally touch the joystick while the power is on, the power chair can start moving during the reaching and leaning process.

Rotate the front wheels sideways while the power chair is stationary, this will give the power chair a better grip of the surface it's parked on.

Avoid shift or tilt your body sideways during the reaching and leaning process.

Never move out of the seat of your power chair during the reaching and leaning process, try to keep your back and rear end in contact with the backrest as much as possible.

Never attempt to pick up an item on the floor by reaching down between your knees.

Never attempt to reach with both hands. In case if you lose your balance, you may not be able to hold yourself to prevent a fall.

Never put pressure on the footrests while reaching or leaning.

Never attempt to reach for an item that is far, move your power chair as close as possible to the item that you wish to reach.

If possible, have an assistant to help you during the reaching or leaning process.

5.16 Dressing while Sitting in the Power Chair

WARNING

Dressing while sitting in the power chair affects the center of balance of both you and your power chair. With improper techniques, falling or tipping over can occur, resulting in injuries and/or damage to the power chair.

WARNING

Make sure the power is turned off when you are dressing while sitting in the power chair. If you accidentally touch the joystick while the power is on, the power chair can start moving during the dressing process. Rotate the front wheels as forward as possible, this will make the power chair more stable.

Avoid shift or tilt your body sideways during the dressing process.

Never move out of the seat of your power chair during the dressing process, try to keep your back and rear end in contact with the backrest as much as possible.

Never put pressure on the footrests while dressing.

If possible, have an assistant to help you during the dressing process.

5.17 Reverse Driving



WARNING

Reverse driving takes practice and time to get used to. Be cautious while driving in reverse, hitting an object during the process may result in falling.

- While driving in reverse, keep an eye on what's behind you to make sure the path is clear.
- Drive as slow and steady as possible.

5.18 Lifting the power chair

The total weight of your power chair including the batteries is 28lbs, if you or your assistant choose to lift the power chair, be aware of the following.



WARNING

Lift the power chair with proper techniques to avoid injuries.

Never attempt to lift the power chair while the user is still sitting on it.

Make sure the power chair is folded completely before attempting to lift the unit.

COMPONENT SAFETY GUIDELINES

6.1 Armrests

WARNING

Never attempt to lift your power chair by its armrests, the armrests cannot bear the weight of this power chair.

Never attempt to sit on the armrests, doing so will damage the power chair and/or cause the power chair to tip over.

6.2 Batteries

WARNING

Do not connect the cable directly to the battery terminal/clip for charging.

Do not remove the fuse from the battery harness. If the fuse is damaged, please contact your supplier for replacement.

Keep the batteries away from flammable sources, never transfer these batteries with flammable or combustible materials.

Never attempt to disassemble the batteries, they contain corrosive chemicals and may cause explosion.

Never attempt to use pliers or cable wires to connect the ends of the batteries directly, this can cause a short circuit.

Never attempt to operate the power chair while the batteries are charging.

Never attempt to charge the batteries with non-standard power supply, only use the battery charger provided by Forcemech.

Keep children away from the power chair while the batteries are charging.

6.3 Fasteners

WARNING

If you choose to adjust, repair or maintain your power chair, make sure all fasteners are secured back to their normal position.

These fasteners on your power chair are custom designed to work only with Forcemech Ultralite G20, never attempt to use any other fasteners.

Periodically check the fasteners to make sure they are secured.

Never over or under tighten fasteners.

6.4 Footrests

WARNING

Never attempt to lift your power chair by its footrests, the footrests cannot bear the weight of this power chair.
Never attempt to stand on the footrests, doing so will damage the power chair and/or cause the power chair to tip over.
While moving your feet, be careful not to get caught in the space between the footrests and the power chair.
While getting on/off the power chair, be careful not to get tripped over by the footrests.

6.5 Controller

WARNING

The controller effectively controls the movement of your power chair. Before operating the power chair for the first time, it is extremely important for you to understand the features and settings of the joystick controller. Read over the Joystick Controller setup and settings section under section 2.6 Controller Operation, take some time to practice operating your power chair in a safe environment before operating in the public.

WARNING

Check and verify the controller settings every six months.
The maximum operating speed is 4.5 miles per hour.
Slow down your power chair while turning to avoid losing balance.
Contact Forcemech immediately if you notice there's a change to the settings of the controller.

6.6 Motor Brakes

WARNING

Never attempt to lock or unlock the motor brakes unless the power of your power chair is turned off.

During the manual/free wheel mode, your power chair does not have any braking mechanism, make sure your assistant has full control while he/she is pushing.

Make sure the power chair is operating on a flat terrain when you switch the power chair to its manual/free wheel mode.

6.7 Power ON/OFF Button

WARNING

Never attempt to turn off the power switch to stop the power chair unless there's an emergency. Doing so will cause the power chair to stop suddenly, and may throw you off balance and fall from the power chair.

6.8 Seat and Backrest Cushion

WARNING

Both seat and backrest cushion of your power chair are designed for comfort, not for relief of pressure.

When placing the seat cushion and backrest cushion on your power chair, make sure you align them with the VELCRO hook and loop fasteners on the power chair.

ELECTROMAGNETIC INTERFERENCE

7.1 What is Electromagnetic Interference?

Electromagnetic Interference (EMI), also called radio-frequency interference (RFI), is a disturbance generated by an external source such as mobile phones, walkie-talkie, radio/TV stations and electric power transmission lines. This disturbance can affect an electrical circuit and even stop it from functioning.

7.2 Sources of EMI

There are generally three types of electromagnetic interference:

A. Hand held transmitter receivers:

a) Citizens band radios

b) Mobile phones and walkie-talkie

c) Security, fire and police radios

B. Medium range transmitter receivers:

a) Radio sources used by police cars, fire trucks, ambulances and taxis; these usually have antenna mounted on the outside of the vehicle.

C. Long range transmitter receivers:

a) Radio sources used by commercial radio and TV broadcast towers as well as amateur (HAM) radios

7.3 Effects of EMI on Power Chair



WARNING

Electromagnetic interference may trigger the brakes of the power chair to lose control, causing the power chair to move by itself. This could bring serious injuries to the power chair user and considerable damage to the power chair.

7.4 Resistance to EMI

The higher the EMI resistance is, the less likely the electronic device will be affected by EMI. Our power chair has passed the test of electromagnetic/radio frequency resistance of 20 V/M, and this should protect the power chair from most common sources of radio waves.

7.5 EMI Sources that are Relatively Safe

These devices are not likely to cause problems to the power chair:

A. Laptops (without a phone or fax machine)

B. AM/FM radios

C. CD/cassette players

D. Cell Phones / Cordless phones

E. Electric shavers and hair dryers

7.6 Preventive Actions

Even though your power chair is equipped with anti-interference ability, users should note the following:

WARNING

Avoid using devices such as citizens band radios, mobile phones, walkie-talkie, laptop while operating the power chair.

Avoid getting into close proximity with nearby transmitter receivers such as radio and TV stations.

In case the brake loses control, and the power chair is moving by itself, turn off the power chair as soon as it is safe to do so.

Avoid modifying parts or adding accessories to the power chair not certified by Forcemech as these actions may affect the EMI resistance, making the power chair more susceptible to EMI sources.

7.7 EMI Incidents Report

If you experience unintended movement or brake release while operating the power chair, and there's an EMI source nearby, please report this incident to us.

BATTERY MAINTENANCE

8.1 Charging the Batteries

WARNING

Before charging the batteries, make sure your power chair is powered off. Always connect the battery charger to the power chair or individual battery first, then connect the battery charger to a wall outlet. Disconnect by unplug the battery charger from the wall outlet first, then disconnect from the power chair.

Forcemech Ultralite G20 comes with one lithium ion battery, and there are two ways to charge them. (see section 2.5 of the Quick Start Guide for details on charging ports)

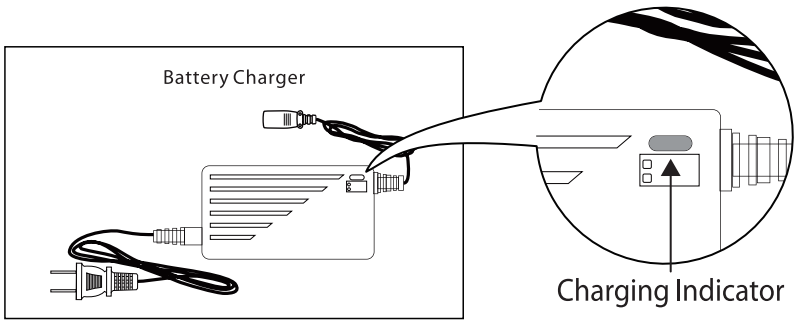

After connecting the Battery Charger:

A. The battery is charging when the indicator of the charger turns Blue; when the indicator turns from Blue to GREEN, the batteries are fully charged.

B. Once the batteries are fully charged, disconnect the charging cable from the joystick or the battery charging port.

C. It takes approximately 4-6 hours to fully recharge the batteries.

8.2 Maximizing the Life Cycles of the Batteries

Fully charge your new battery prior to its initial use. This brings the battery up to about 90% of its peak performance level; Give the battery another full charge of 4-6 hours and operate your wheelchair again, the batteries will now perform at over 90% of their potential; After four or five charging cycles, the batteries will reach 100% charge and last for an extended period. Please replace a new battery when the battery failure, and the old battery must be returned to supplier because of environmental pollution. The battery is guaranteed for 1 year.

8.3 Battery Indicator & Over Discharge Protection

The battery indicator shows the current remaining battery level.
Full bars: Battery is sufficient / fully charged.
Only two bars left (red): Low battery—charge soon.
Icon flashing: Critically low—charge immediately.

Your power chair comes with an over discharge protection device. In case the batteries run out of power while the power chair is operating, the over discharge protection will stop the power chair from operating to protect the batteries from getting any potential damage.

8.4 Over Current Protection

Your power chair also comes with an over current protection device. In case you encounter malfunctions while operating, the over current protection will cut off the current, stop the motors from running to protect the batteries and motors from getting any potential damage.

8.5 Cleaning the Batteries

WARNING

Periodically check the battery case, positive and negative terminals of the batteries for signs of corrosion.
Use dry, soft lint free cloth to clean the batteries from any dust or metal particles.
Never attempt to rinse the batteries with water.

8.6 Battery Storage

A. Always fully charge your batteries before storing them.
B. Store the batteries in a clean, dry area.

8.7 Battery Disposal

WARNING

Batteries that reach the maximum life cycles or corroded batteries are hazardous waste.
Contact your local recycling center for disposal of the batteries.

POWER CHAIR MAINTENANCE

We designed this power chair hoping to provide you comfort and mobility throughout your daily activities for many years to come, regular maintenance will both increase the lifespan and maintain the performance of this power chair.

9.1 Cleaning



WARNING

Clean your power chair often, wipe off any dust or dirt especially on or around motors and wheels.

Never attempt to clean your power chair with oil or chemical liquids.

Never attempt to use a water hose to rinse the power chair, clean the surface with a damp cloth, then use a lint free cloth to wipe off any water marks.

Wash the seat and backrest cushions only if necessary, they can be hand washed or machine washed cold water and tumble dry low.

9.2 Routine Check



WARNING

Regularly check the power chair for any loose fasteners. Use the Free maintenance tools that came with the chair to tighten all screws and bolts.

Regularly check the cables and connectors to see if they are tightly connected. Reconnect any cables and connectors if they are loose.

Periodically check the batteries for any signs of corrosion.

9.3 Storage



WARNING

Store your power chair in a clean and dry area.

Perform a thorough check before operating the power chair after storage.

TROUBLESHOOTING

10.1 Common Issues

These are the most common issues the operator may experience and ways to resolve them.

Chair powered ON, not moving when pushing the joystick, Controller keeps beeping.	Please check and ensure the chair is in the electric mode by pushing both levers on the motor to the forward position. Please refer to section 2.3, Step 8 in the Quick Start Guide.
Chair powered ON, not moving when pushing joystick, Controller LED blinking.	You or someone else may have engaged the electronic anti theft accidentally. Please refer to section 2.6, how to set the Electronic Lock in the Quick Start Guide to unlock the chair.
Cannot pull the chair around while folded.	Please check and ensure the chair is Powered OFF and in the manual mode. Please refer to section 2.3, Step 8 in the Quick Start Guide.

10.2 Diagnostic System

The LED digital display on the joystick also functions as a diagnostic indicator for your power chair.

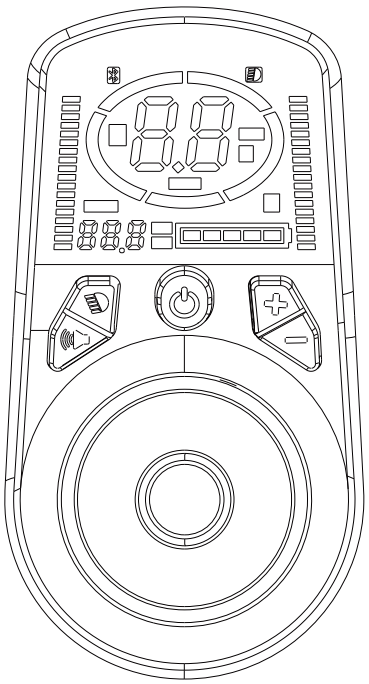

When an abnormal condition occurs, and without using any other service tools, the fault can be identified by the buzzer alert tones and the diagnostic code number displayed in the center of the LCD screen. Common faults and their solutions are listed in the table below.

10.3 Diagnostic Chart

Please refer to section 3.3 electrical diagram for component cabling guide.

	Battery Charge Critically Low	1. Charge for at least 30 minutes before powering ON. 2. The battery may be damaged and may not accept a charge. Have the battery voltage checked at a qualified battery/service shop. 3. Contact Forcemech Support for assistance.
	Left Motor Fault	To determine the cause of a left motor fault: 1. Check whether the left motor connection is loose or if any wiring is disconnected. 2. Swap the left and right motor cables and power on again. If the controller still sounds 2 beeps, the controller is faulty. Contact Forcemech Support for assistance. If the controller sounds 4 beeps, the motor is faulty.
	Left Motor Brake Fault	To determine the cause of a left motor brake fault: 1. Check whether the left brake connection is loose, or whether the brake power cut-off switch is damaged. 2. Swap the left and right motor cables and power on again. If the controller still sounds 3 beeps, the controller is faulty. Contact Forcemech Support for assistance. If the controller sounds 5 beeps, the motor brake is faulty.
	Right Motor Fault	To determine the cause of a right motor fault: 1. Check whether the right motor connection is loose or if any wiring is disconnected. 2. Swap the left and right motor cables and power on again. If the controller still sounds 4 beeps, the controller is faulty. Contact Forcemech Support for assistance. If the controller sounds 2 beeps, the motor is faulty.
	Right Motor Brake Fault	To determine the cause of a right motor brake fault: 1. Check whether the right brake connection is loose, or whether the brake power cut-off switch is damaged. 2. Swap the left and right motor cables and power on again. If the controller still sounds 5 beeps, the controller is faulty. Contact Forcemech Support for assistance. If the controller sounds 3 beeps, the motor brake is faulty.
	Motor Stall (Overcurrent)	Power OFF and restart to restore automatically.
	Joystick Fault / Controller Overvoltage	Contact Forcemech Support for inspection and service.
	Controller Internal Fault	Contact Forcemech Support for inspection and service.
	Left Motor Hall Sensor Fault	To determine the cause of a left motor Hall sensor fault: 1. Check whether the left motor connection is loose or if any wiring is disconnected. 2. Swap the left and right motor cables and power on again. If the controller still sounds 9 beeps, the controller is faulty. Contact Forcemech Support for assistance. If the controller sounds 10 beeps, the motor Hall sensor wire is faulty.
	Right Motor Hall Sensor Fault	To determine the cause of a right motor Hall sensor fault: 1. Check whether the right motor connection is loose or if any wiring is disconnected. 2. Swap the left and right motor cables and power on again. If the controller still sounds 10 beeps, the controller is faulty. Contact Forcemech Support for assistance. If the controller sounds 9 beeps, the motor Hall sensor wire is faulty.

WARRANTY

Forcemech International LLC. offers a limited warranty to your Forcemech Ultralite G20 and its parts against defects in materials and/or workmanship, contact us immediately if you notice there is an ongoing issue with your power chair.

1. Main frame – five years
2. Motors – two years
3. Controller Box(CPU) – one year
4. Batteries – one year
5. Joystick Controller – one year

There are exclusions to our limited warranty:

1. Damage to the power chair caused by exceeding the weight limit of 300lbs.
2. Damage to the power chair caused by accidents or natural disasters.
3. Damage to the power chair due to improper use and handling.
4. Modifying power chair with unauthorized installation of components not from Forcemech.
5. Consumables such as cushions, tires and bearings are not covered.
6. This warranty does not apply to routine maintenance and adjustments.
7. This warranty only applies to the original buyer, and is not transferable.

Contact Forcemech

For questions on how to operate the chair, warranty claims, purchasing parts or any other issues you may have related to the power chair, please contact us. We will be happy to assist you.

by phone: 1-877-90-FORCE
by email: support@forcemech.com

When contacting Forcemech, please have one of the following ready and we will be able to locate your order quickly to better assist you. For warranty claims, it is required for us to verify your purchase.

A. Serial Number (located on the back cover of this manual as well as on the chair at the inner side of the battery housing frame).

B. Original Receipt (whichever retailer/online platform you purchased our chair from).

Serial Number ⟶

No reproduction in any form of this manual, in whole or in part (except for brief quotation in critical aricles or reviews), may be made without written authorization from Forcemech International LLC.

FORCEMECH

INNOVATE MOBILITY FREEDOM

FORCEMECH SERIAL NUMBER & CERTIFICATE OF AUTHENTICATION

ULTRALITE G20

Forcemech International LLC.

PHONE: 1-877-90-FORCE EMAIL: support@forcemech.com

©2026 Forcemech International LLC.